Polo 1995 ➤

4-cyl. injection engine (4-valve, roller rocker finger), Mechanics									
Engine ID	ARC	AVY							

Edition 10.1999

Protected by copyright. Copying for private or commercial purposes, in part or in whole, is not permitted unless authorised by Volkswagen AG. Volkswagen AG does not guarantee or accept any liability with respect to the correctness of information in this document. Copyright by Volkswagen AG.

satelettronica

List of Workshop Manual Repair GroupsList of Workshop Manual Repair GroupsList of Workshop Manual Repair Groups

Polo 1995 ➤

4-cyl. injection engine (4-valve, roller rocker finger), Mechanics

Repair Group

00 - Technical data
10 - Removing and installing engine
13 - Crankshaft group
15 - Cylinder head, Valve gear
17 - Lubrication
19 - Cooling system
20 - Fuel supply system
26 - Exhaust system

Protected by copyright. Copying for private or commercial purposes, in part or in whole, is not permitted unless authorised by Volkswagen AG. Volkswagen AG does not guarantee or accept any liability with respect to the correctness of information in this document. Copyright by Volkswagen AG.

satelettronica

Technical information should always be available to the foremen and mechanics, because their careful and constant adherence to the instructions is essential to ensure vehicle road-worthiness and safety. In addition, the normal basic safety precautions for working on motor vehicles must, as a matter of course, be observed.

All rights reserved.
No reproduction without prior agreement from publisher.

Copyright © 2010 Volkswagen AG, Wolfsburg

Contents

00 - Technical data 1
1 Technical data 1
1.1 Technical data 1
1.2 Engine number 1
1.3 Engine data 1

10 - Removing and installing engine 3
1 Removing and installing engine 3
1.1 Removing and installing engine 3
1.2 Notes on removing 4
1.3 Securing engine to assembly stand 7
1.4 Notes on installing 7
1.5 Tightening torques 9
1.6 Assembly mountings 9
1.7 Additional information and removal instructions for vehicles with air conditioner 10

13 - Crankshaft group 12
1 Dismantling and assembling engine 12
1.1 Dismantling and assembling engine 12
1.2 Removing and installing ribbed belt 22
2 Dismantling and assembling cylinder block, crankshaft and flywheel 24
2.1 Dismantling and assembling cylinder block, crankshaft and flywheel 24
2.2 Crankshaft dimensions 27
2.3 Renewing crankshaft oil seal -belt pulley end- 27
2.4 Renewing crankshaft sealing flange -flywheel end- 29
3 Dismantling and assembling pistons and conrods 38
3.1 Dismantling and assembling pistons and conrods 38
3.2 Piston and cylinder dimensions 44

15 - Cylinder head, Valve gear 45
1 Removing and installing cylinder head 45
1.1 Removing and installing cylinder head 45
1.2 Checking valve timing 50
1.3 Checking semi-automatic toothed belt tensioning roller 53
1.4 Removing, installing and tensioning toothed belts 58
1.5 Removing and installing camshaft housing 65
1.6 Removing and installing cylinder head 68
1.7 Checking compression pressures 72
2 Servicing valve gear 74
2.1 Servicing valve gear 74
2.2 Reworking valve seats 83
2.3 Checking camshaft timing adjustment 85
2.4 Removing and installing camshaft adjuster and exhaust camshaft sprocket 89
2.5 Renewing camshaft oil seals 97
2.6 Checking valve guides 100
2.7 Renewing valve guides 101
2.8 Renewing valve stem seals 102

17 - Lubrication 105
1 Removing and installing parts of the lubrication system 105
1.1 Removing and installing parts of the lubrication system 105
1.2 Removing and installing oil sump 112
1.3 Removing and installing oil pump 114

satelettronica

1.4 Checking oil pressure and oil pressure switch 117

19 - Cooling system 119

1 Removing and installing parts of cooling system 119
1.1 Removing and installing parts of cooling system 119
1.2 Parts of cooling system body side 120
1.3 Parts of cooling system engine side 123
1.4 Coolant hose connection diagram 128
1.5 Draining and filling cooling system 129
1.6 Removing and installing radiator 131
1.7 Removing and installing coolant pump 133

20 - Fuel supply system 135

1 Removing and installing parts of fuel supply system 135
1.1 Removing and installing parts of fuel supply system 135
1.2 Removing and installing fuel tank with its attachments and fuel filter 136
1.3 Safety precautions when working on the fuel supply system 141
1.4 Rules for cleanliness 142
1.5 Removing and installing fuel delivery unit 142
1.6 Removing and installing fuel gauge sender 144
1.7 Removing and installing fuel tank 144
1.8 Checking fuel pump 146

2 Electronic power control (EPC) 152
2.1 Electronic power control (EPC) 152
2.2 Function of EPC system 152
2.3 Servicing parts of electronic power control (EPC) 153
2.4 Checking accelerator pedal position sender 154

3 Activated charcoal filter system 157
3.1 Activated charcoal filter system 157
3.2 Function 157
3.3 Servicing parts of the activated charcoal filter system 158
3.4 Checking fuel tank breather 160

26 - Exhaust system 162

1 Removing and installing parts of exhaust system 162
1.1 Removing and installing parts of exhaust system 162
1.2 Exhaust manifold, front exhaust pipe and catalyst with attachments 163
1.3 Checking catalyst 169

Protected by copyright. Copying for private or commercial purposes, in part or in whole, is not permitted unless authorised by Volkswagen AG. Volkswagen AG does not guarantee or accept any liability with respect to the correctness of information in this document. Copyright by Volkswagen AG.
satelettronica

00 - Technical data

1 - Technical data

1.1 - Technical data

1.2 - Engine number

The engine number consists of up to nine characters (alphanumeric). The first part (maximal 3 characters) makes up the "engine code", and the second part (6 characters), the "serial number". If more than 999,999 engines with the same engine code are produced, the first of the six characters is replaced with a letter.

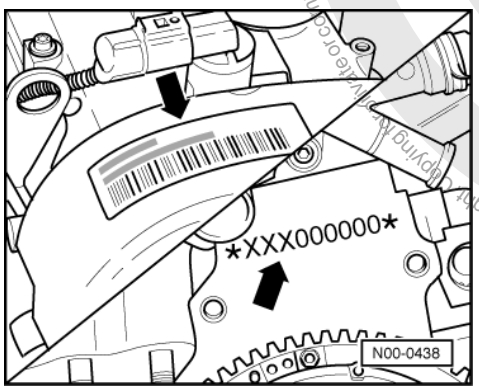

-> The engine number ("Code letters" and "Serial number") can be found on the front of the cylinder block at the gearbox end below the thermostat housing.

Additionally there is a sticker on the toothed belt guard with "Engine code" and "Serial number".

The engine code is also on the vehicle data plate and on the crankcase above the gearbox.

1.3 - Engine data

Engine code		ARC	AVY
Manufactured		10.99 ▸	05.00 ▸
Exhaust emissions fulfil		D3 standard	EU4 standard
Capacity	cm3	1598	1598
Output	kW at rpm	92/6500	92/6500
Torque	Nm at rpm	152/3300	152/3300
Bore	ø mm	76.5	76.5
Stroke	mm	86.9	86.9
Compression ratio		11.5	11.5
RON	min.	98 unleaded1)	98 unleaded1)
Injection, ignition		SIMOS 3	SIMOS 3
Knock control		1 Knock sensor	1 Knock sensor
Camshaft adjustment		Yes	Yes

satelettronica

Self-diagnosis	Yes	Yes
Exhaust gas recirculation	No	No
Lambda control	2 Probes	2 Probes
Catalyst	x	x

1) In exceptional circumstances min. 95 RON, however with reduced performance

Protected by copyright. Copying for private or commercial purposes, in part or in whole, is not permitted unless authorised by Volkswagen AG. Volkswagen AG does not guarantee or accept any liability with respect to the correctness of information in this document. Copyright by Volkswagen AG.

satelettronica

10 - Removing and installing engine

1 - Removing and installing engine

1.1 - Removing and installing engine

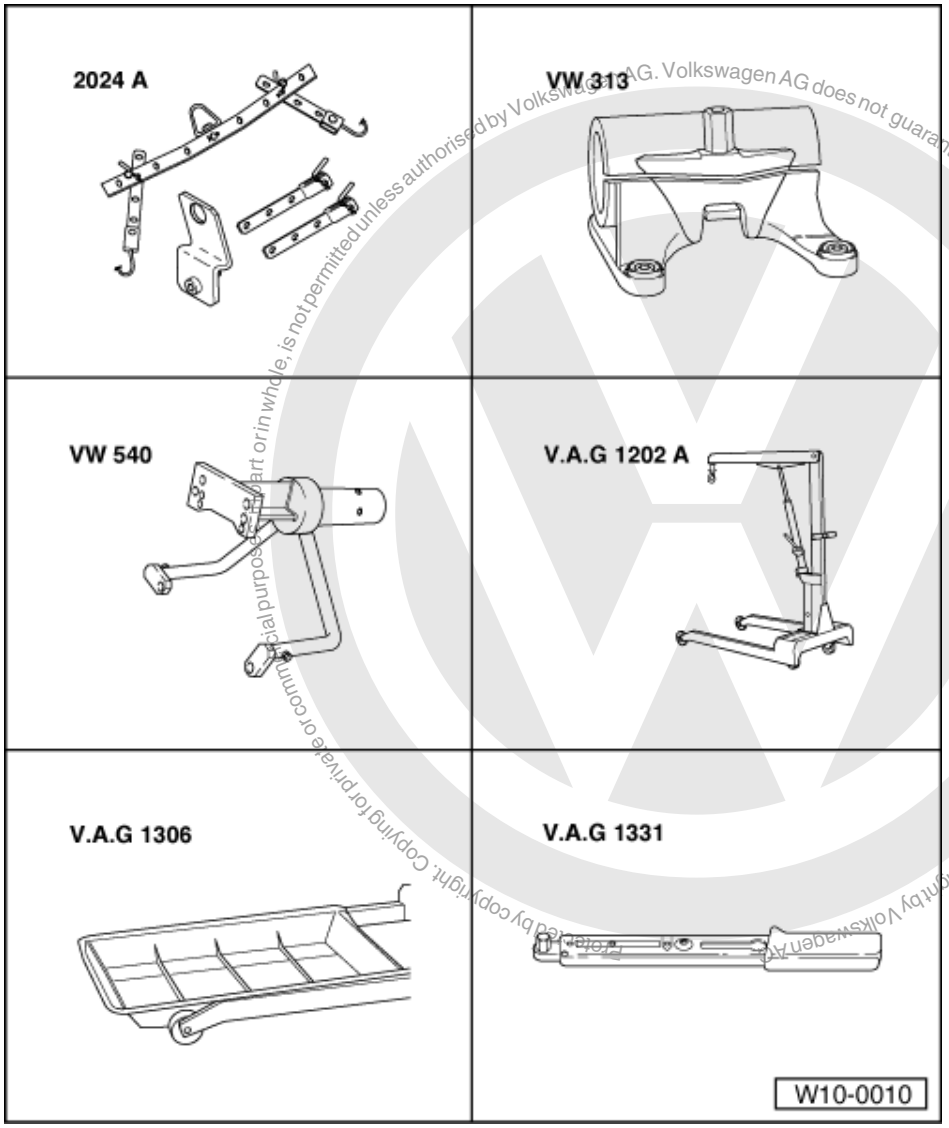

satelettronica

Special tools, workshop equipment, test and measuring appliances and auxiliary items required

- 2024 A Lifting tackle
- VW 313 Support clamp
- VW 540 Engine and gearbox support
- V.A.G 1202 A Workshop crane
- V.A.G 1306 Drip tray
- V.A.G 1331 Torque wrench (5...50 Nm)

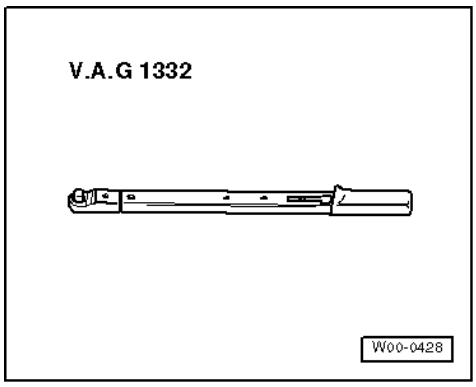

- V.A.G 1332 Torque wrench (40...200 Nm)

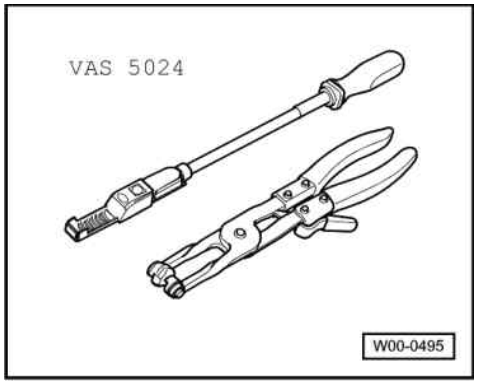

- VAS 5024 Assembly tool for spring-type clips
- G 000 100 grease (vehicles with manual gearbox)
- Cable tie

1.2 - Notes on removing

Note:

Check whether a coded radio is installed as during the forthcoming work sequences the battery earth strap must be disconnected. Obtain radio code first if necessary.

- The engine is removed forwards together with the gearbox.
- All cable ties which are opened or cut open when removing engine, must be replaced in the same position when installing engine.

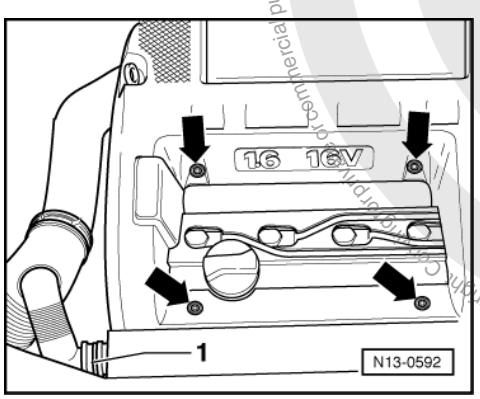

- -> Remove cover above camshaft housing -arrows-.
- Remove air cleaner:

Protected by copyright. Copyright by Volkswagen AG. Volkswagen AG does not guarantee or accept any liability with respect to the correctness of information in this document. Copyright by Volkswagen AG.
satelettronica

=> Repair group 24; Servicing injection; Dismantling and assembling air cleaner Servicing injection Dismantling and assembling air cleaner

- Remove battery
- Remove battery tray.

- Unclip cable guide -from battery to bulkhead-.
- Release plus wire from battery to starter motor (is removed together with assembly).

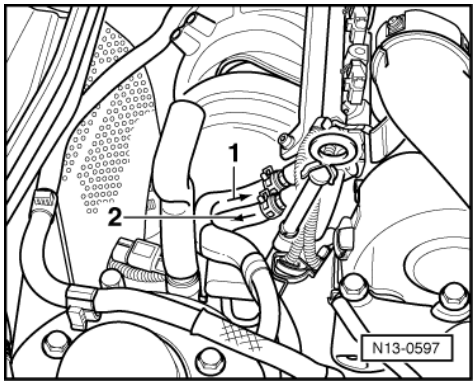

- -> Disconnect fuel supply and fuel return pipes at fuel rail, items -1- and -2-.

Warning!
Fuel supply lines are under pressure! Before removing from hose connection wrap a cloth around the connection. Then release pressure by carefully pulling hose off connection.

- Seal the pipes so that the fuel system is not contaminated by dirt etc.
- Observe rules for cleanliness => Page 142 .
- Disconnect clutch cable:

=> 5-speed manual gearbox 085; Repair group 30; Servicing clutch mechanism Servicing clutch mechanism

Remove connecting hose for air cleaner/air intake connecting piece.
Open and close the expansion tank sealing cap to release pressure in cooling system.

- Loosen or separate the following components:
  - The hose from activated charcoal filter system to throttle valve control part
  - The vacuum hose from brake servo to inlet manifold
  - The collective connectors below thermostat housing
  - The connector from engine speed sender below oil dipstick tube bracket, and pull connector out from retainer
  - The connector from ignition transformer, from Hall sender and throttle valve control part
  - The connector from coolant temperature sender, oil pressure switch and the engine oil temperature switch
- Remove noise insulation tray:

=> General body repairs; Repair group 50; Front body; Removing insulation tray Front body Removing insulation tray

- Loosen or separate the following components:
  - Connector for Lambda probes

- Drain coolant => Page 129 .
- Pull off coolant hose at engine with assembly tool for spring-type clamps VAS 5024.
- Loosen belt pulley securing bolts from power steering vane pump.
- Remove ribbed belt => Page 22 .
- Unbolt power steering vane pump and secure to sub-frame with wire; hoses remain connected:

satelettronica

=> Running gear; Repair group 48; Assembly overview: vane pump, reservoir, hydraulic lines; Removing and installing power steering vane pump. Assembly overview: vane pump, reservoir, hydraulic lines Removing and installing power steering vane pump.

- Remove left and right-hand drive shaft on gearbox and tie up:

=> Running gear, Axles, Steering; Repair group 40; Servicing front suspension; Removing and installing drive shafts Servicing front suspension Removing and installing drive shafts

Vehicles with air conditioner

- Removing air conditioner compressor:
- Observe additional information and removal instructions =>Page10-15

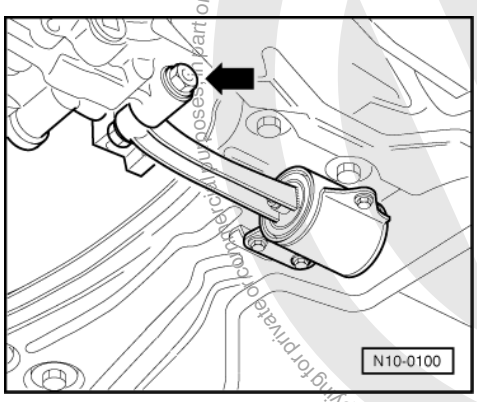

- -> Unbolt pendulum support from gearbox.

- Separate front exhaust pipe from exhaust manifold => Page 163 , exhaust manifold, front exhaust pipe and catalyst with attachments.
- Disconnect cable selector mechanism from gearbox.

=> 5-speed manual gearbox 085; Repair group 34; Servicing selector mechanism (cable selector mechanism); Removing and installing selector mechanism Servicing selector mechanism (cable selector mechanism) Removing and installing selector mechanism

- Pull vacuum and breather hoses off engine.
- Disconnect all electric wires from gearbox, alternator and starter and move clear.
- Remove securing clamps for power steering pressure pipe.
- Removing lock carrier with attachments:

=> General body repairs, Exterior; Repair group 50; Body, front; Removing and installing lock carrier with attachments. Body, front Removing and installing lock carrier with attachments.

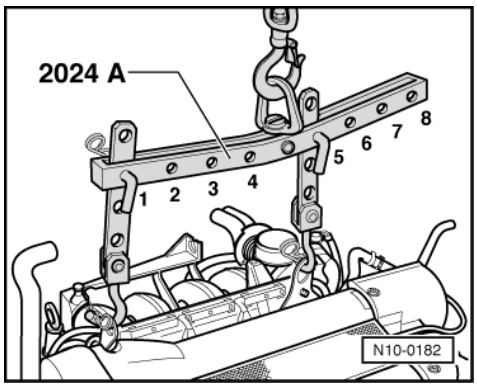

- -> Attach lifting tackle 2024 A as follows and lift slightly with workshop crane:

  Pulley end:
  3rd hole in hook at position 1

  Flywheel end:

satelettronica

3rd hole in hook at position 5

Warning! The hooks and locating pins must be secured with locking pins.

Notes:

- The positions marked 1...4 on the bar must be towards the pulley end.
- The holes in the hook rails are counted up from the hook.

- Remove power steering reservoir and tie up.

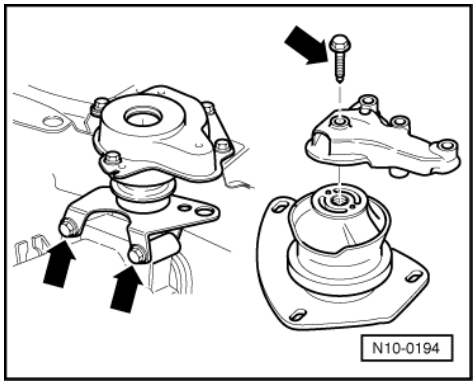

- -> Unbolt assembly at gearbox and engine mountings.
- Lower assembly until it is released from the gearbox mounting.

Turn assembly slightly to left (engine forwards, gearbox rearwards) and lift engine carefully out forwards.

Note:

When the assembly is lifted off, it must be carefully guided to prevent damage to the bodywork.

1.3 - Securing engine to assembly stand

When working on the engine, it should be secured to the assembly stand support clamp VW 313 using the engine and gearbox box support VW 540.

Work sequence

- Remove gearbox.
- Remove pressure plate.
- Remove flywheel.
- Remove intermediate plate.
- Secure engine to support clamp VW 313 using engine and gearbox support VW 540.

1.4 - Notes on installing

Installation is carried out in the reverse sequence, when doing this note the following:

- Check clutch release bearing for wear, renew if necessary.
- Lightly grease clutch release bearing, release bearing guide sleeve and splines on input shaft with G 000 100.

Protected by copyright. Copying for private or commercial purposes, in part or in whole, is not permitted unless authorised by Volkswagen AG. Volkswagen AG does not guarantee or accept any liability with respect to the correctness of information in this document. Copyright by Volkswagen AG.

satelettronica

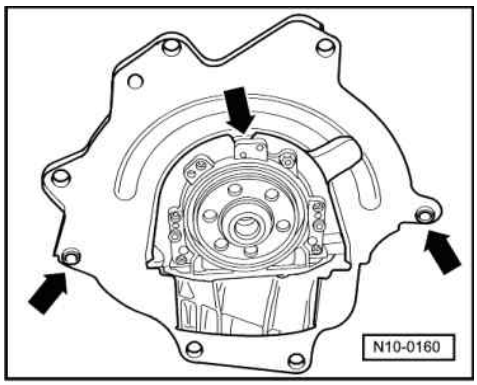

- Check whether the dowel sleeves for centralising engine/gearbox are in the cylinder block, install if necessary.
- -> Fit intermediate plate onto sealing flange and slide onto dowel sleeves -arrows-.
- When swinging the assembly in, ensure that clearance exists between the drive shafts.
- Check centring of clutch drive plate, if necessary.

- Check clutch release bearing for wear and renew if necessary.

=> 5-speed manual gearbox 085; Repair group 30; Servicing clutch control; Servicing clutch release mechanism Servicing clutch control Servicing clutch release mechanism

- Lightly grease clutch release bearing, release bearing guide sleeve and splines on input shaft with G 000 100.
- Align engine mountings stress-free by rocking, if necessary loosen engine mountings to body.

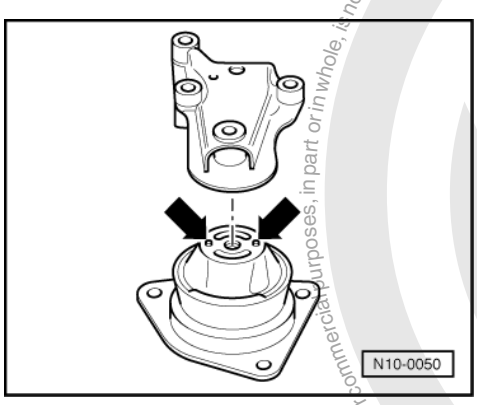

- -> When installing the engine mounting ensure that the pins on the bonded rubber mounting engage in the engine mounting -arrows-.
- Renew pointed bolt for securing shift finger (clean threads in shift finger).
- Install gear selector mechanism:

=> 5-speed manual gearbox 085; Repair group 34; Servicing selector mechanism (cable selector mechanism); Removing and installing selector mechanism Servicing selector mechanism (cable selector mechanism) Removing and installing selector mechanism

- Install drive shafts:

=> Running gear; Repair group 40; Removing and installing drive shafts Removing and installing drive shafts

- Install front exhaust pipe => Page 163 , exhaust manifold, front exhaust pipe with catalyst and attachments.
- Installing P.A.S. vane pump:

=> Running gear; Repair group 48; Assembly overview: vane pump, reservoir, hydraulic pipes Assembly overview: vane pump, reservoir, hydraulic pipes

- Install air conditioner compressor.
- Electrical connections and routing:

Protected by copyright. Copyright by Volkswagen AG.
Commercial purposes, in part or in whole, is not permitted unless authorised by Volkswagen AG. Volkswagen AG does not guarantee or accept any liability with respect to the correctness of information in this document.
satelettronica

=> Electrical system; Repair group 97

- Install ribbed belt => Page 22 .
- Install centre, left and right insulation trays:

=> General body repairs exterior; Repair group 50; Body front; Assembly overview Body front Assembly overview

- Filling with coolant => Page 129
- Install air cleaner:

=> Repair group 24; Servicing injection system; Dismantling and assembling air cleaner. Servicing injection system Dismantling and assembling air cleaner.

- Erase the learnt values and adapt the engine control unit again:

=> Repair group 24; Engine control unit; Erasing learnt values and adapting engine control unit to throttle valve control part Engine control unit Erasing learnt values and adapting engine control unit to throttle valve control part

1.5 - Tightening torques

Bolted connection		Tightening torque
Engine to gearbox	M10	45 Nm
	M12	80 Nm
Starter to gearbox		20 Nm
Drive shafts to flanged shafts		45 Nm
Flywheel shield plate		10 Nm
Selector mech. mount on gearbox		25 Nm
Selector mech. support on engine and sub-frame		20 Nm
Selector finger on selector rods		25 Nm
Exhaust pipe to manifold		40 Nm

1.6 - Assembly mountings

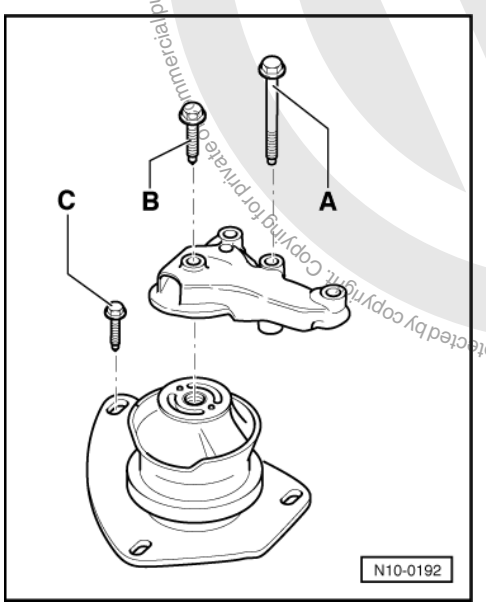

Protected by copyright. Copying for private or commercial purposes, in part or whole, is only permitted with the express authorisation by Volkswagen AG. Volkswagen AG does not guarantee or accept any liability with respect to the correctness of information in this document. Copyright by Volkswagen AG.
satelettronica

Tightening torques

Note:

The bolts must not be used again.

-> Engine mounting

A = 40 Nm + 1/4 turn (90°) further
B = 50 Nm
C = 20 Nm + 1/8 turn (45°) further

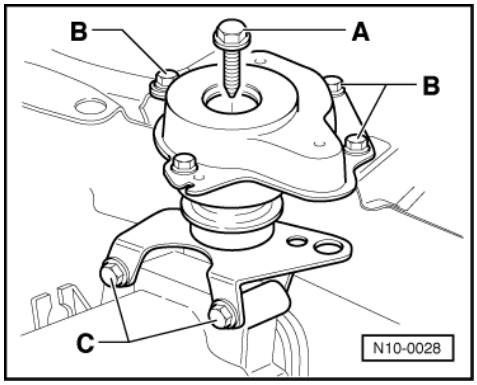

-> Gearbox mounting

A = 60 Nm + 1/4 turn (90°) further
B = 20 Nm + 1/8 turn (45°) further
C = 50 Nm

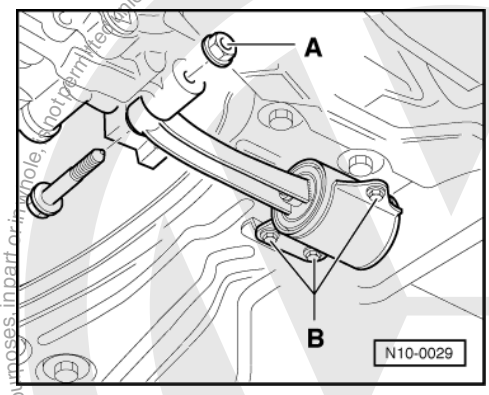

-> Pendulum support

A = 50 Nm (tighten on nut)
B = 35 Nm

1.7 - Additional information and removal instructions for vehicles with air conditioner

Warning!
The air conditioning system refrigerant circuit must not be opened.

Copyright by Volkswagen AG. Volkswagen AG does not guarantee or accept any liability with respect to the correctness of information in this document. Protected by copyright. Commercial purposes, in part or in whole, is not permitted unless authorised by Volkswagen AG.
satelettronica

Note:

To prevent damage to condenser and also to the refrigerant lines/hoses, ensure that the pipes and hoses are not stretched, kinked or bent.

To facilitate removing and installing the engine without opening the refrigerant circuit:

- Unbolt air conditioner fluid reservoir and allow to hang free.
- Unbolt retaining clamp(s) for refrigerant lines.
- Remove ribbed belt => Page 22 .
- Removing lock carrier with attachments:

=> General body repairs; Repair group 50; Body, front; Removing and installing lock carrier with attachments. Body, front Removing and installing lock carrier with attachments.

- Removing air conditioner compressor:

=> Heating, air conditioner system; Repair group 87

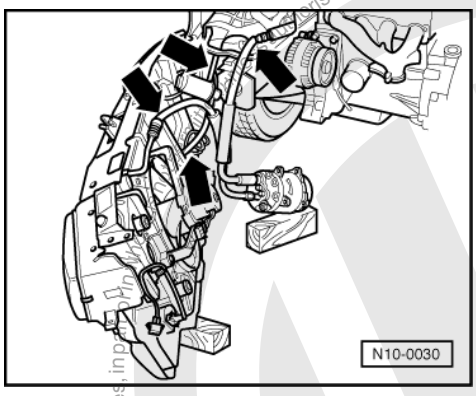

- -> Remove air conditioner compressor and lay to one side with lock carrier so that the refrigerant hoses - arrows- are not stressed.

Protected by copyright. Copying for private or commercial purposes, in part or in whole, is not permitted unless authorised by Volkswagen AG. Volkswagen AG does not guarantee or accept any liability with respect to the correctness of information in this document. Copyright by Volkswagen AG.
satelettronica

13 - Crankshaft group

1 - Dismantling and assembling engine

1.1 - Dismantling and assembling engine

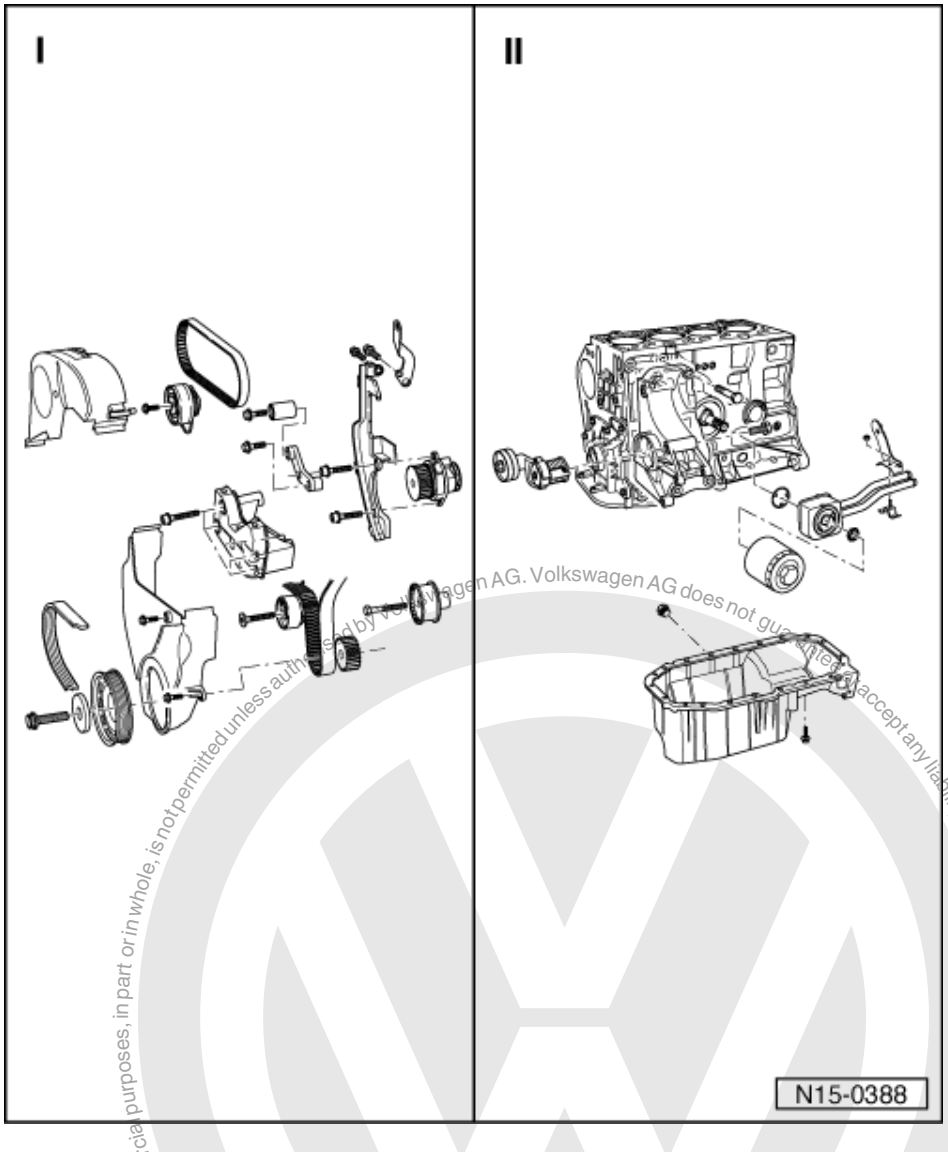

I =>Page 13

II =>Page 18

Protected by copyright. Copying for private or commercial purposes, in part or in whole, is not permitted unless authorised by Volkswagen AG. Volkswagen AG does not guarantee or accept any liability with respect to the correctness of information in this document. Copyright by Volkswagen AG.
satelettronica

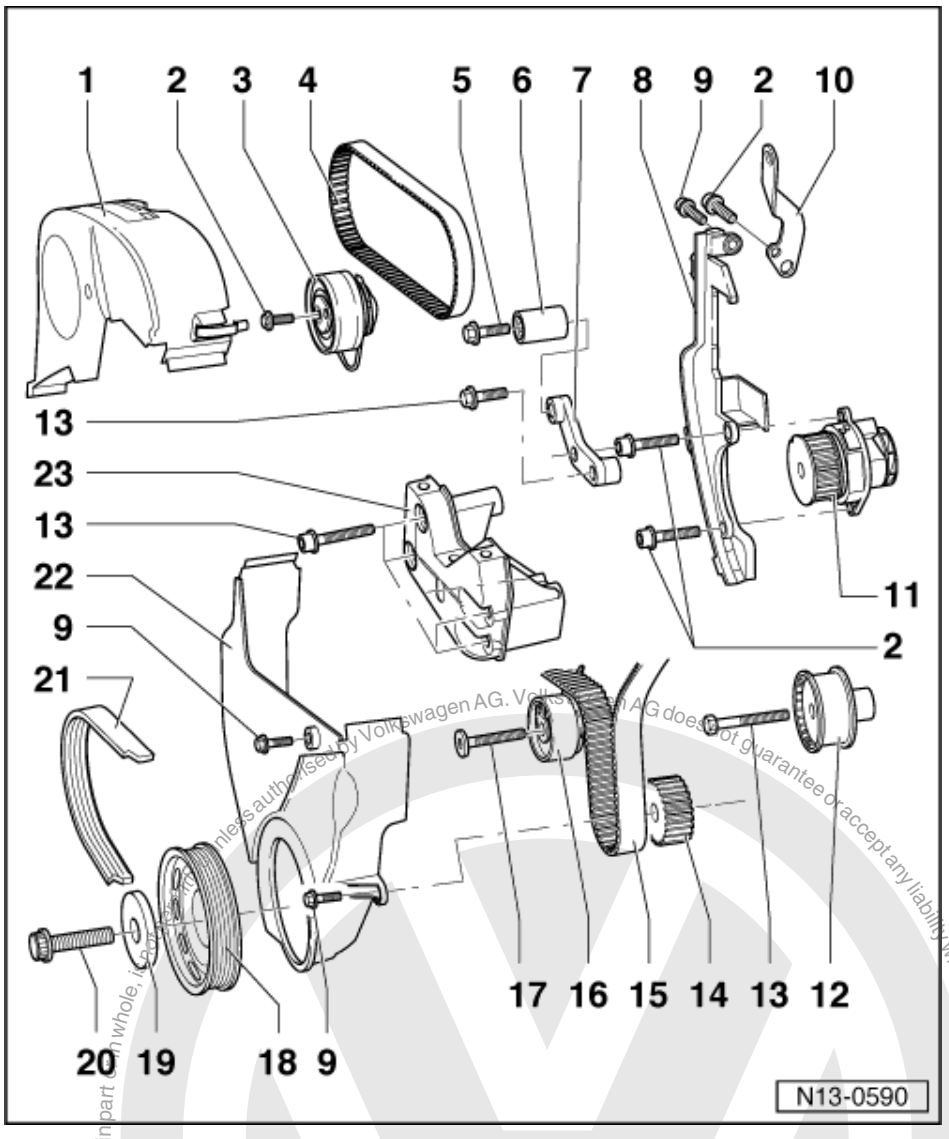

Part I

1 Toothed belt guard - upper part
2 20 Nm
3 Coupling drive tensioning roller
- Checking => Page 53
- Tensioning toothed belts => Page 58

4 Coupling drive toothed belt
- Mark D.O.R. before removing
- Check for wear
- Do not kink
- Toothed belt routing => Fig. 1
- Removing, installing and tensioning => Page 58

5 25 Nm
6 Idler roller
7 Bracket

satelettronica

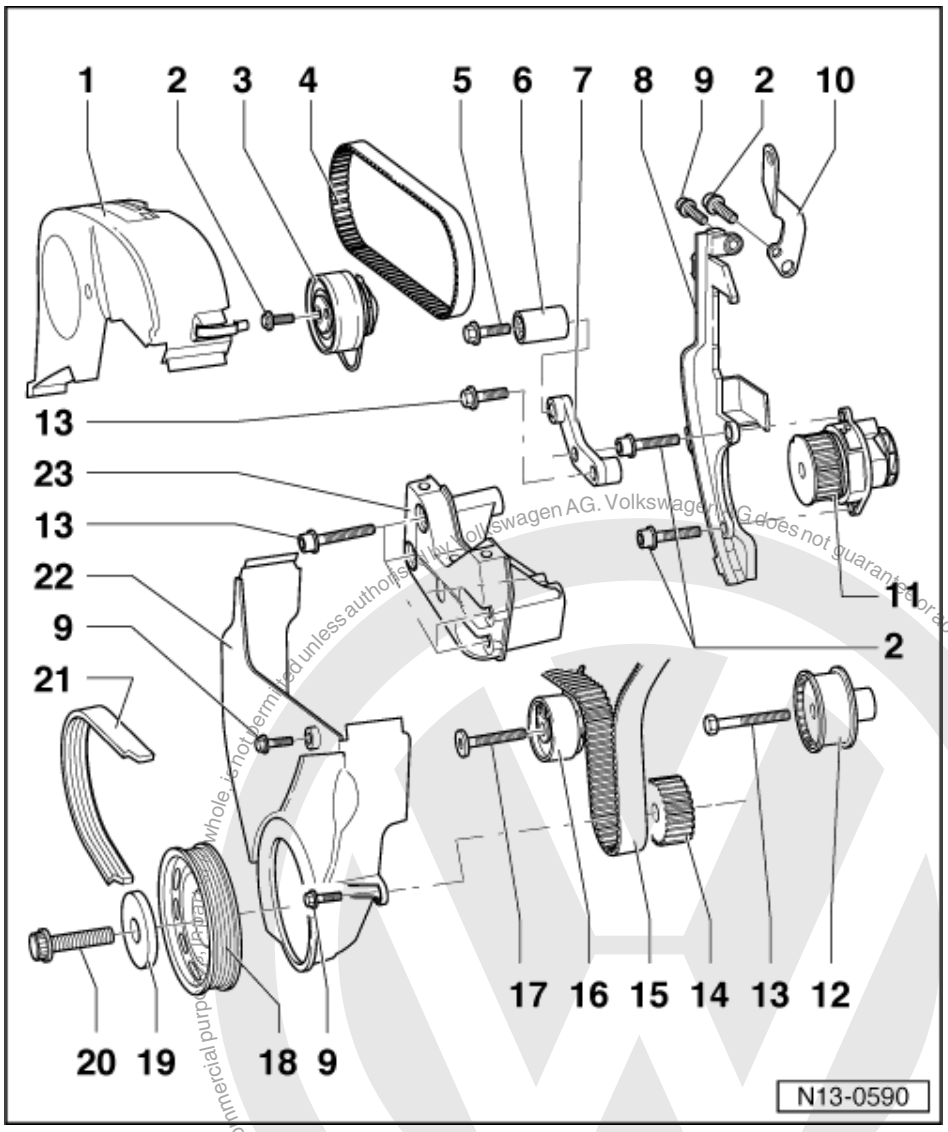

8 Rear toothed belt guard
9 10 Nm
10 Lifting eye
11 Coolant pump
- With integrated seal
- Seal must not be separated from coolant pump
- Replace damaged or leaking coolant pump together with seal
- Removing and installing
  => Page 133

12 Main drive toothed belt idler roller
13 50 Nm

Protected by copyright. Copying for private or commercial purposes, in whole or in part, is not permitted unless authorised by Volkswagen AG. Volkswagen AG does not guarantee or accept any liability with respect to the correctness of information in this document. Copyright by Volkswagen AG.
satelettronica

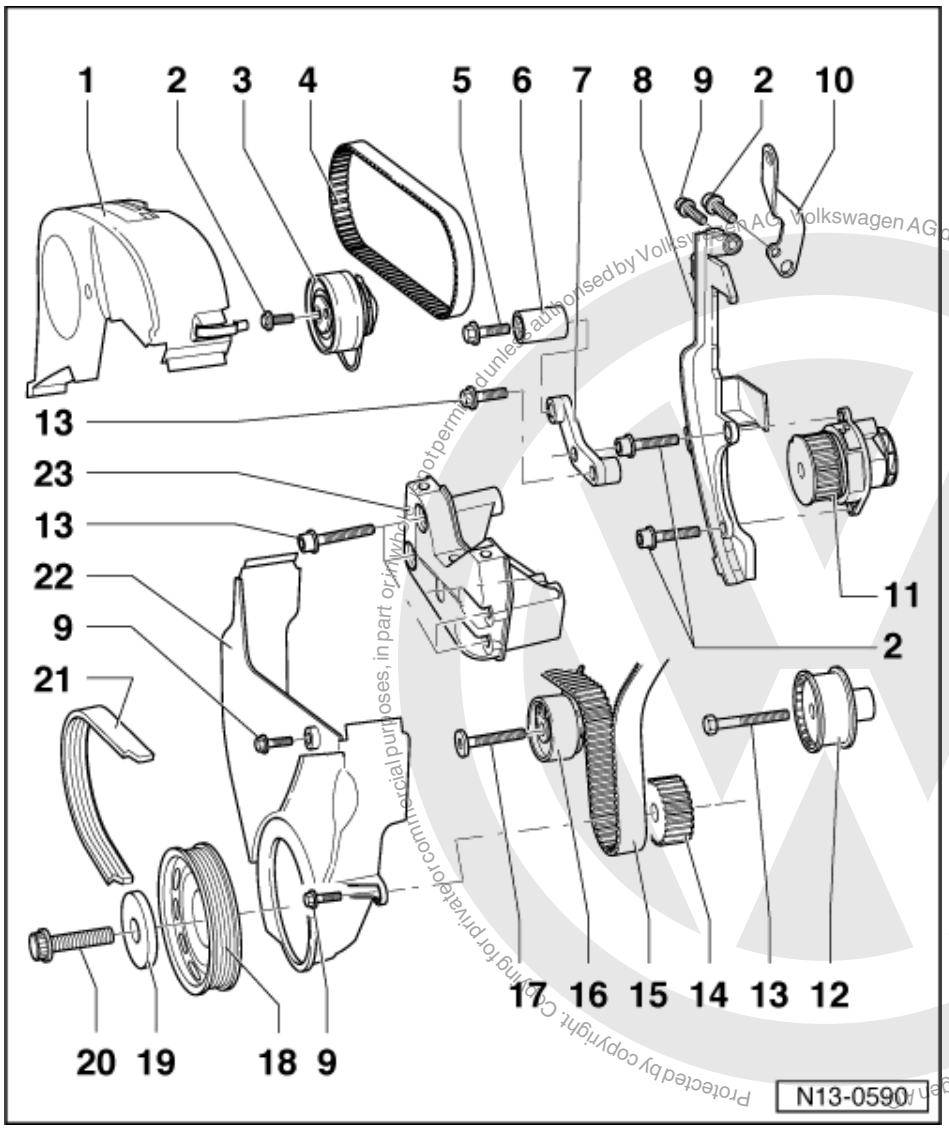

14 Crankshaft toothed belt sprocket

- Note position when installing toothed belt => Page 58

15 Main drive toothed belt

- Mark D.O.R. before removing
- Check for wear
- Do not kink
- Toothed belt routing => Fig. 1
- Removing, installing and tensioning => Page 58

16 Main drive tensioning roller

- Checking => Page 53
- Tensioning toothed belts => Page 58

17 20 Nm

- Loosen and tighten with Torx bit from V.A.G 1766

Protected by copyright. Copying for private or commercial purposes, in part or in whole, is not permitted unless authorised by Volkswagen AG. Volkswagen AG does not guarantee or accept any liability with respect to the correctness of information in this document. Copyright by Volkswagen AG
satelettronica

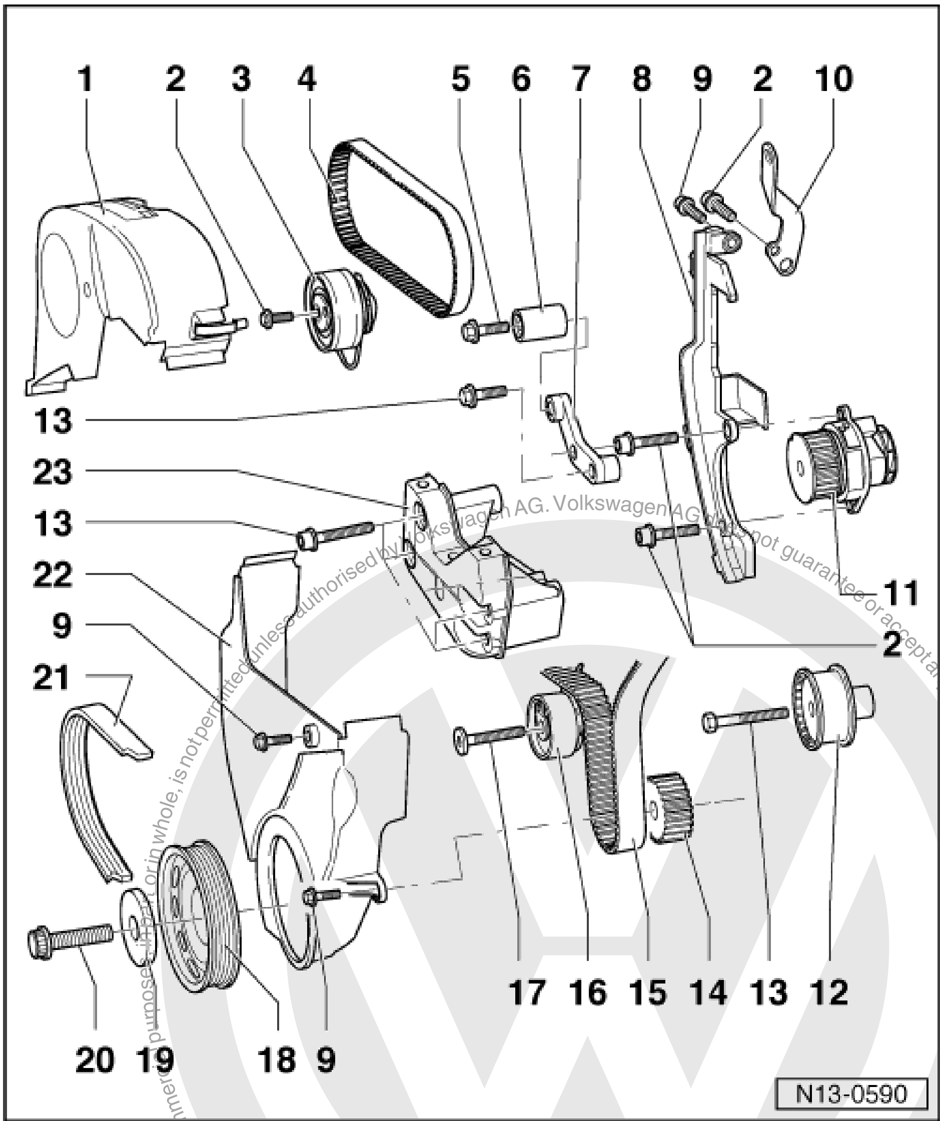

18 Belt pulley

- When installing note fixing arrangement
- Removing and installing
  => Page 58 ; Removing, installing and tensioning toothed belt
- Removing and installing ribbed belt => Page 22

19 Washer

- Renew

20 90 Nm + 1/4 turn (90 °) further

- Renew
- Oil threads
- The turning further can be done in several stages
- The turning further angle can be checked with a commercial protractor e.g. Hazet 6690

Protected by copyright. Copying for private or commercial purposes, in part or in whole, is not permitted unless authorised by Volkswagen AG. Volkswagen AG does not guarantee or accept any liability with respect to the correctness of information in this document. Copyright by Volkswagen AG.

sateletronica

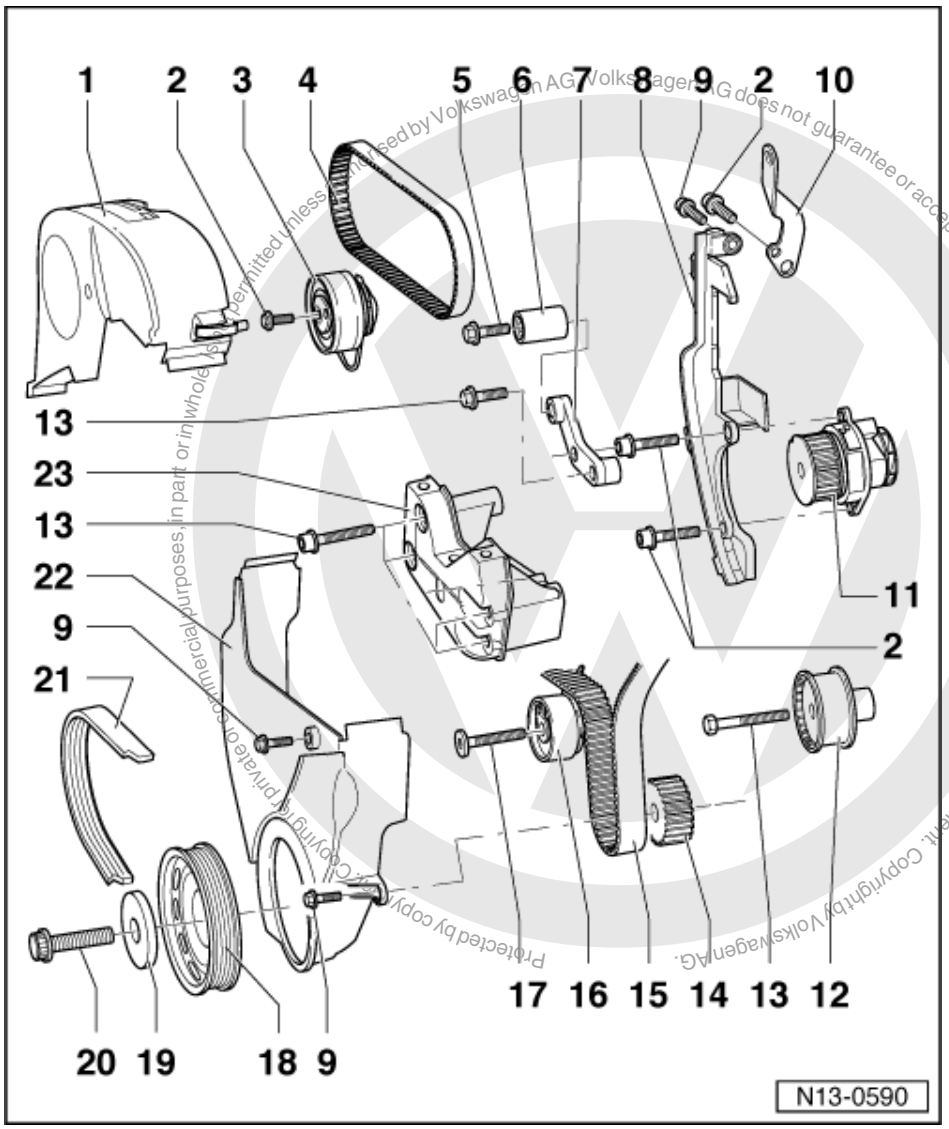

Protected by copyright. Copying for private or commercial purposes, in part or in whole, is not permitted unless authorised by Volkswagen AG. Volkswagen AG does not guarantee or accept any liability with respect to the correctness of information in this document. Copyright by Volkswagen AG.

21 Ribbed belt

- Mark direction of rotation before removing
- Removing and installing
  => Page 22
- Ribbed belt routing
  => Page 23
- Vehicles with air conditioning system have an additional idler roller

22 Toothed belt guard - lower part

23 Console

satelettronica

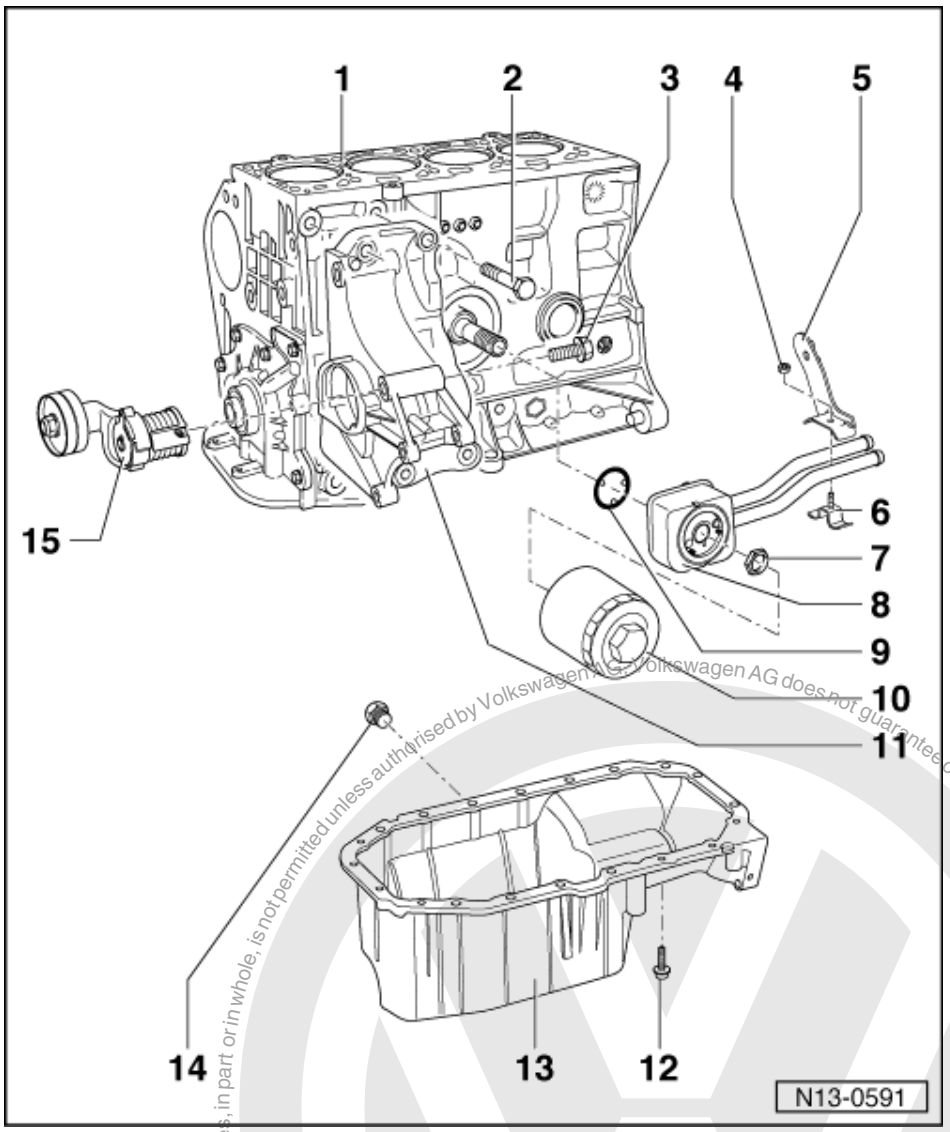

Part II

Note:

Servicing the clutch:

=> 5-Speed manual gearbox 085; Repair group 30; Servicing clutch Servicing clutch

1 Cylinder block
- Dismantling and assembling pistons and conrods
  => Page 38

2 50 Nm
- Tightening sequence:
  Upper right bolt first, then lower right bolt, and bolts on left last (as seen from direction of travel)

Protected by copyright. Copyright by Volkswagen AG. Copying for private or commercial purposes, in part or in whole, is not permitted unless authorised by Volkswagen AG. Volkswagen AG does not guarantee or accept any liability with respect to the correctness of information in this document.
satelettronica

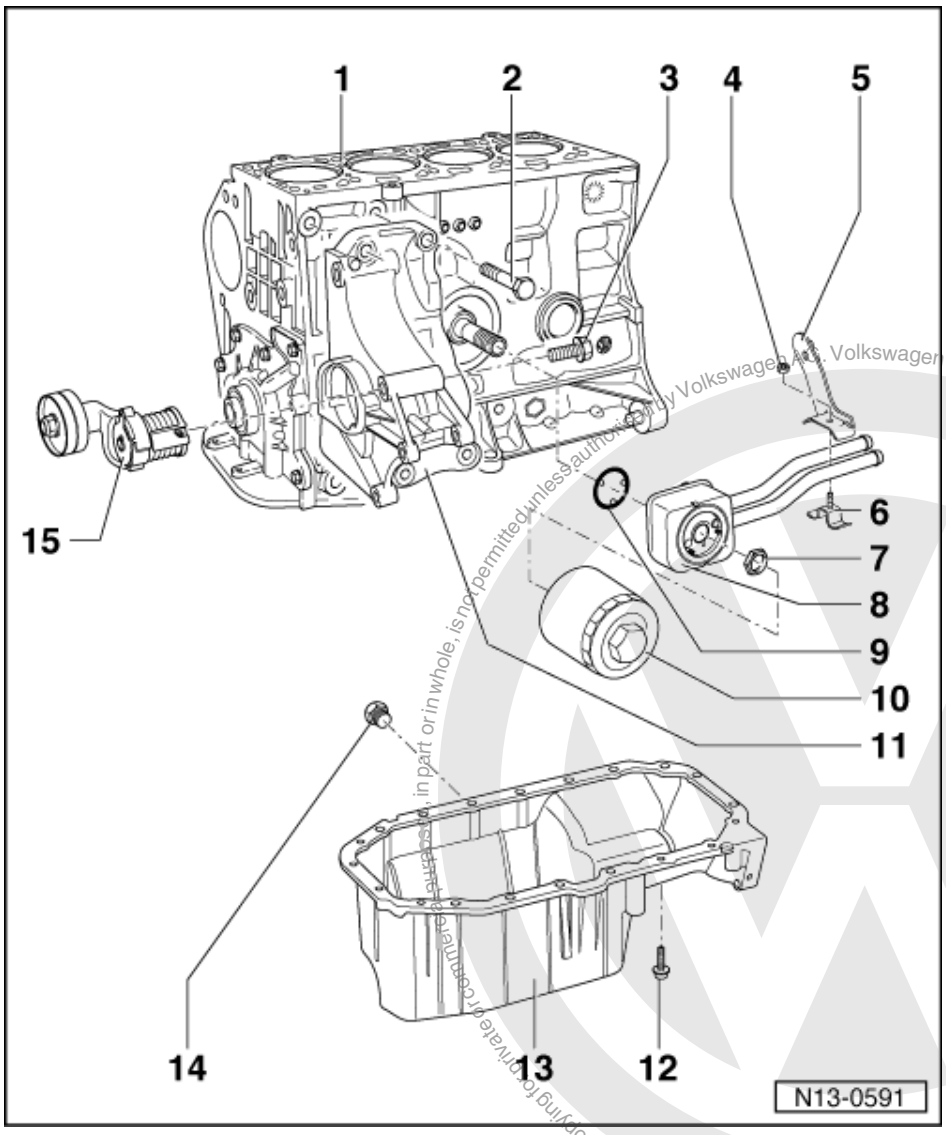

3 M8: 20 Nm + 1/4 turn (90 °) further,
M10: 45 Nm
4 10 Nm
5 Bracket
6 Retaining clip
7 25 Nm
8 Oil cooler
- Ensure clearance to adjacent components
- Coat contact area outside the seal with AMV 188 100 02
- See note
  => Page 105
- Coolant hose connection diagram =>Page 128

Protected by copyright. Copying for private or commercial purposes, in part or in whole, is not permitted unless authorised by Volkswagen AG. Volkswagen AG does not guarantee or accept any liability with respect to the correctness of information in this document. Copyright by Volkswagen AG.
satelettronica

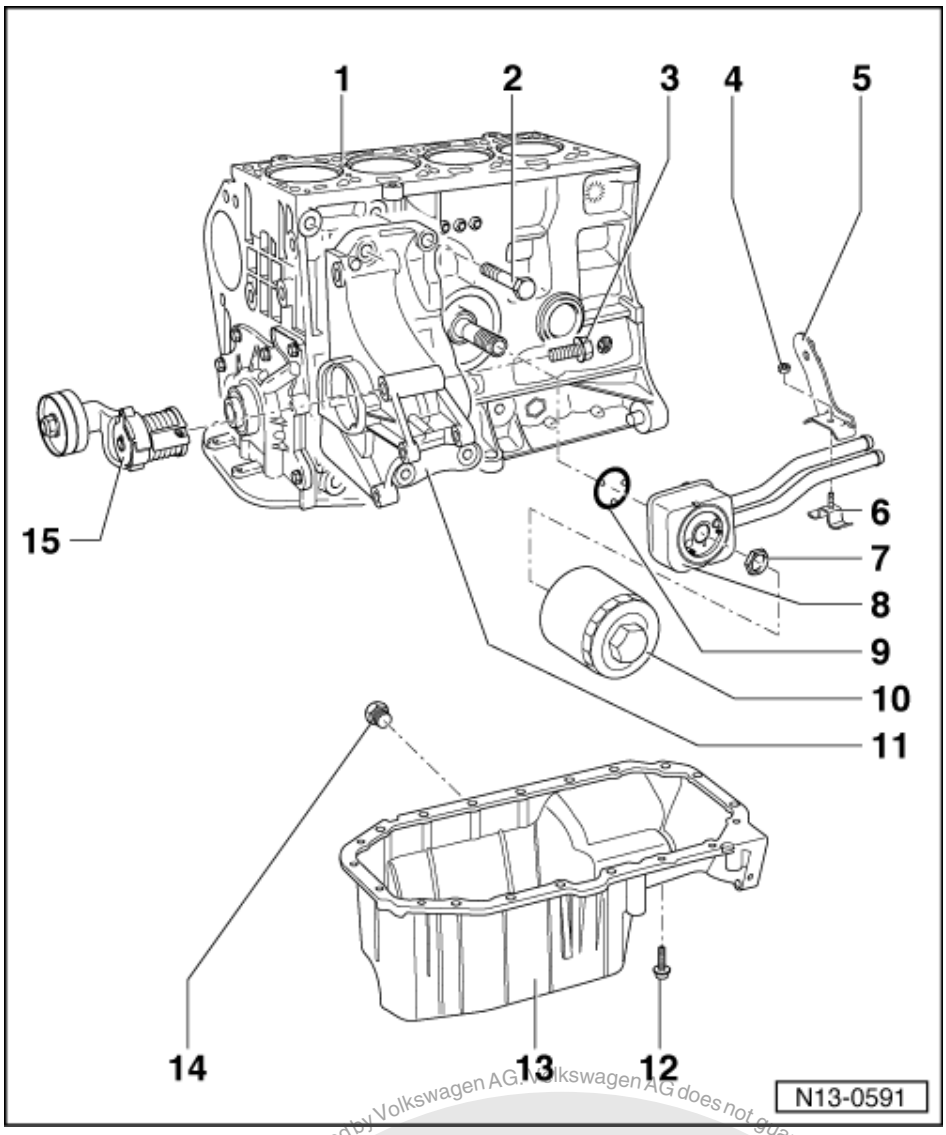

9 O-ring
- Insert in oil cooler before installing oil cooler
- Renew
- Oil before installing

10 Oil filter
- Loosen at hexagon bolt head
- Tighten by hand
- Note instructions on filter when installing

11 Compact bracket
- For vane pump and alternator
- For vehicles without air conditioning system
- Removing and installing compact bracket on vehicles with air conditioning system:

=> Heating, air conditioning; Repair group 87; Air conditioner with manual control; Removing and installing air conditioner compressor bracket Air conditioner with manual control Removing and installing air conditioner compressor bracket

Protected by copyright. Copying for private or commercial purposes, in part or in whole, is not permitted unless authorised by Volkswagen AG. Volkswagen AG does not guarantee or accept any liability with respect to the correctness of information in this document. Copyright by Volkswagen AG.
satelettronica

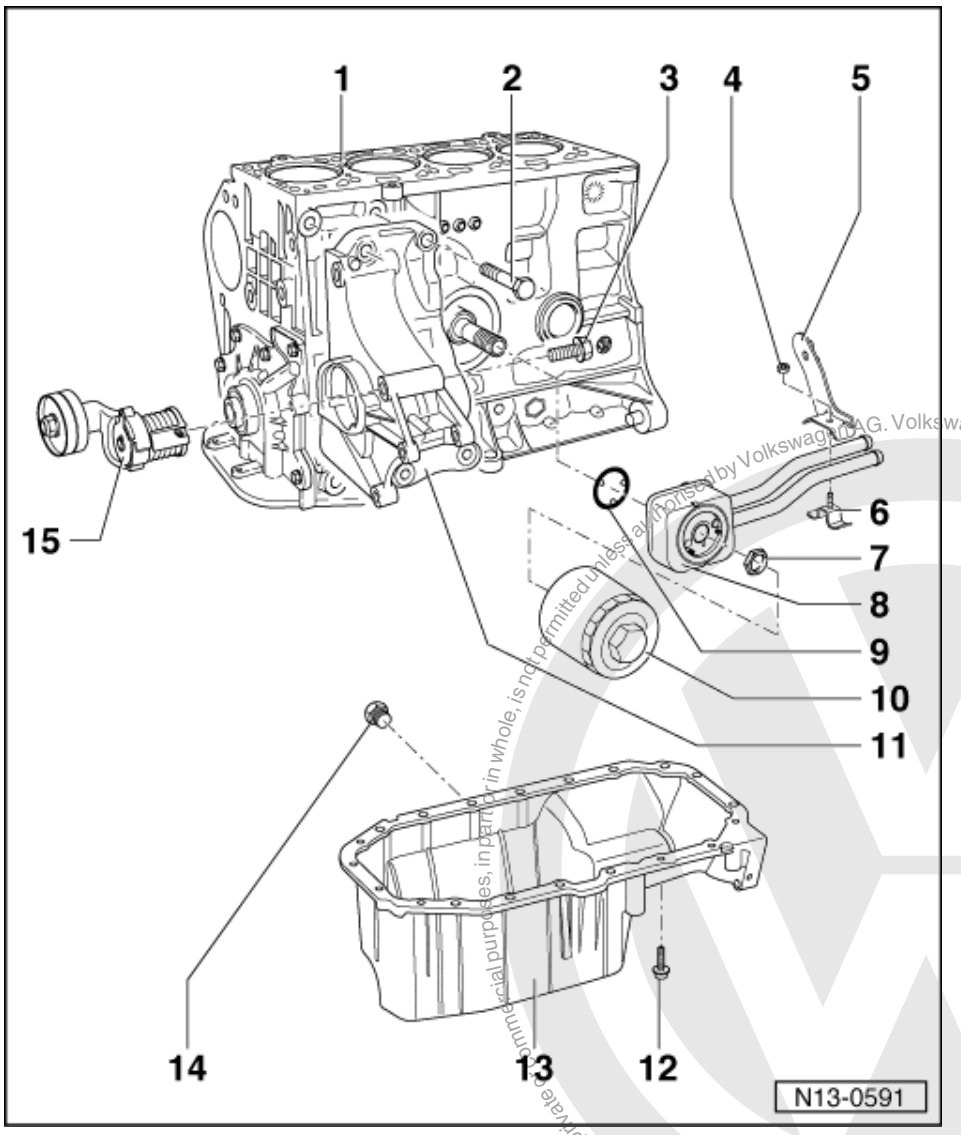

12 13 Nm
- Loosen and tighten only bolts on flywheel end with socket insert T10058

13 Sump
- Removing and installing
  => Page 112

14 Oil drain plug, 30 Nm
- With attached seal
- Renew

15 Tensioning element

Protected by copyright. Copying for private or commercial purposes, in part or in whole, is not permitted unless authorised by Volkswagen AG. Volkswagen AG does not guarantee or accept any liability with respect to the correctness of information in this document. Copyright by Volkswagen AG.
satelettronica

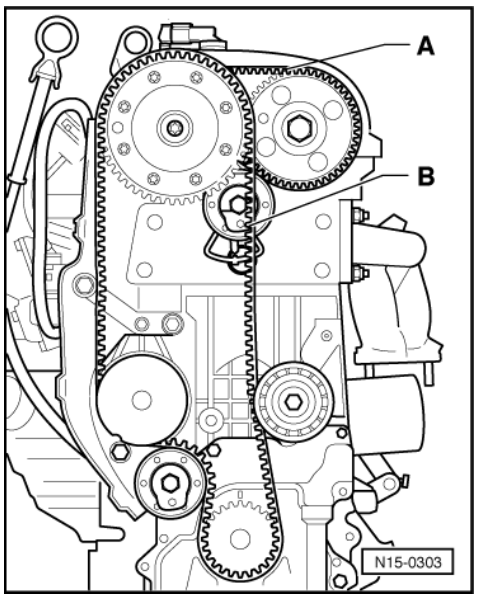

-> Fig. 1 Toothed belt routing

A - Coupling drive toothed belt

B - Main drive toothed belt

1.2 - Removing and installing ribbed belt

Removing

- Remove right insulation tray.
- Mark ribbed belt direction of rotation.

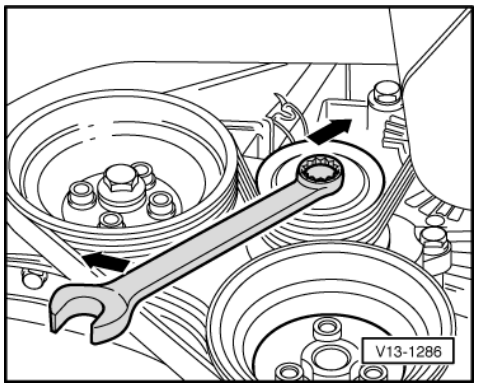

- -> Using a spanner on the securing bolt swivel tensioning roller in direction of arrow.
- Remove ribbed V-belt.

Installing

- Place ribbed V-belt onto crankshaft pulley first. Slide belt onto tensioning roller last.

Copyright by Volkswagen AG. Protected by copyright. Copying for private or commercial purposes, in part or in whole, is not permitted unless authorised by Volkswagen AG. Volkswagen AG does not guarantee or accept any liability with respect to the correctness of information in this document.
satelettronica

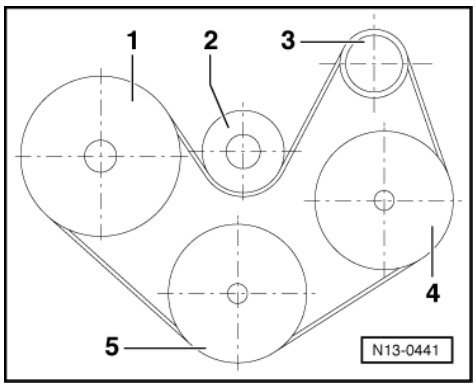

Ribbed belt routing

-> Belt drive with air conditioner compressor

1 - Crankshaft/pulley
2 - Tensioner
3 - Pulley - Alternator
4- Air conditioner compressor
5 - Pulley - P.A.S. vane pump

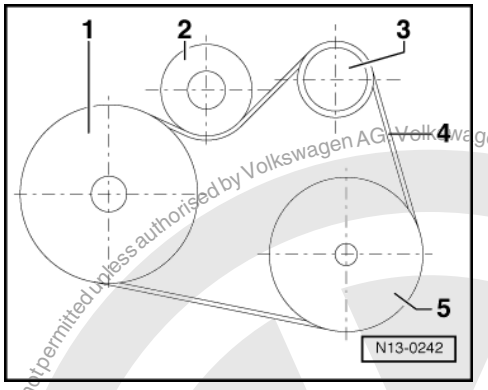

-> Belt drive without air conditioner compressor

1 - Crankshaft/pulley
2 - Tensioner
3 - Pulley - Alternator
4 - Ribbed belt
5 - Pulley - P.A.S. vane pump

Note:

When installing the ribbed V-belt, ensure the belt runs in the right direction and seats correctly on the belt pulleys.

The rest of the assembly is basically a reverse of the dismantling sequence.

Protected by copyright. Copyright for private or commercial purposes, in part or in whole, is not permitted unless authorised by Volkswagen AG. Volkswagen AG does not guarantee or accept any liability with respect to the correctness of information in this document. Copyright by Volkswagen AG.
satelettronica

2 - Dismantling and assembling cylinder block, crankshaft and flywheel

2.1 - Dismantling and assembling cylinder block, crankshaft and flywheel

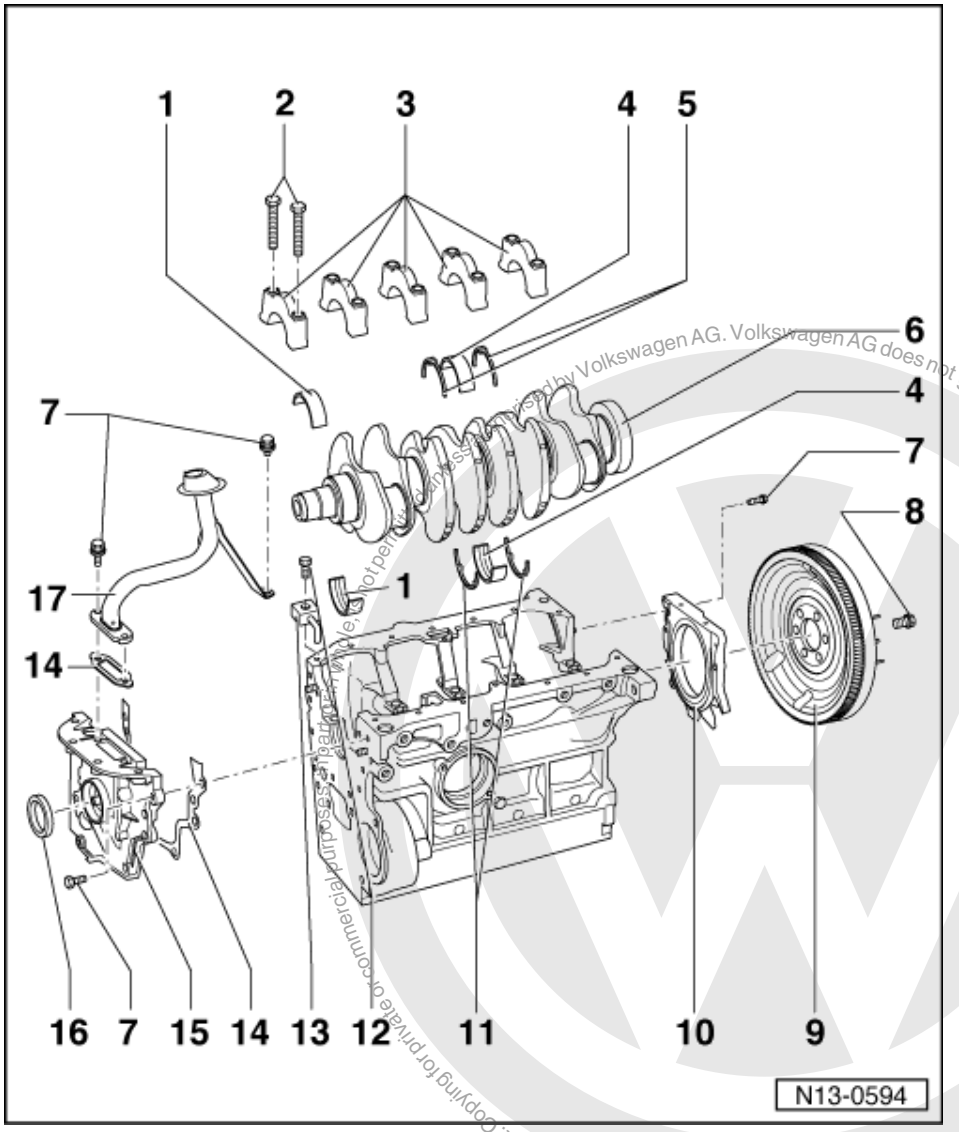

1 Bearing shells 1, 2, 4 and 5
- Do not interchange used bearing shells (mark)

2 65 Nm
- Renew

3 Bearing cap
- Do not interchange bearing caps (mark)
- Bearing cap 3 with recesses for thrust washers
- Bearing shell retaining lugs (cylinder block/bearing cap) must be on the same side

4 Bearing shell 3

satelettronica

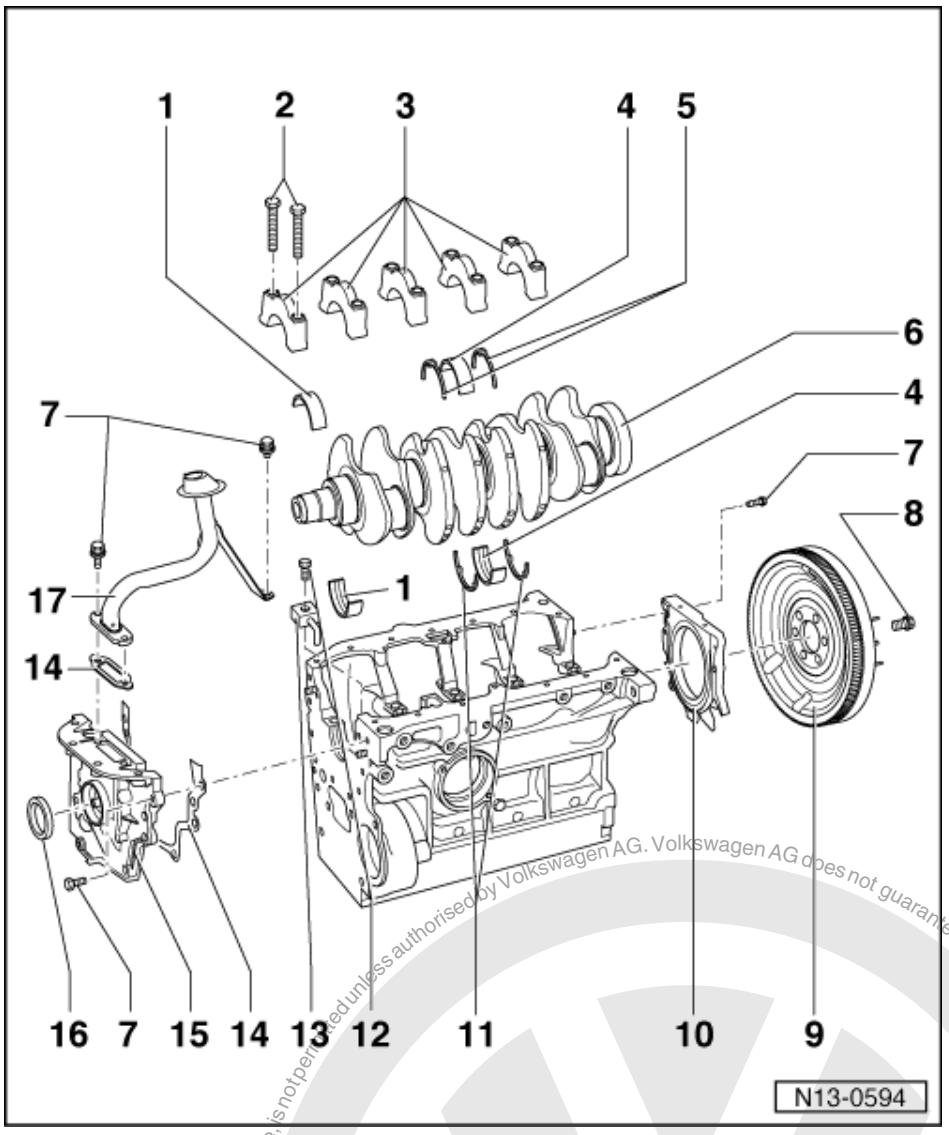

5 Thrust washer
- For bearing cap 3
- Note fixing arrangement

6 Crankshaft
- Axial clearance new: 0.07...0.18 mm
  Wear limit: 0.20 mm
- Check radial clearance with Plastigage
  New: 0.03...0.08 mm
  Wear limit: 0.17 mm
- Do not rotate the crankshaft when checking the radial clearance
- Crankshaft dimensions
  => Page 27

7 10 Nm

8 60 Nm + 1/4 turn (90 °) further
- Renew

9 Flywheel
- To remove and install counter-hold with 10-201

Protected by copyright. Copying for private or commercial purposes, in part or in whole, is not permitted unless authorised by Volkswagen AG. Volkswagen AG does not guarantee or accept any liability with respect to the correctness of information in this document. Copyright by Volkswagen AG.
satelettronica

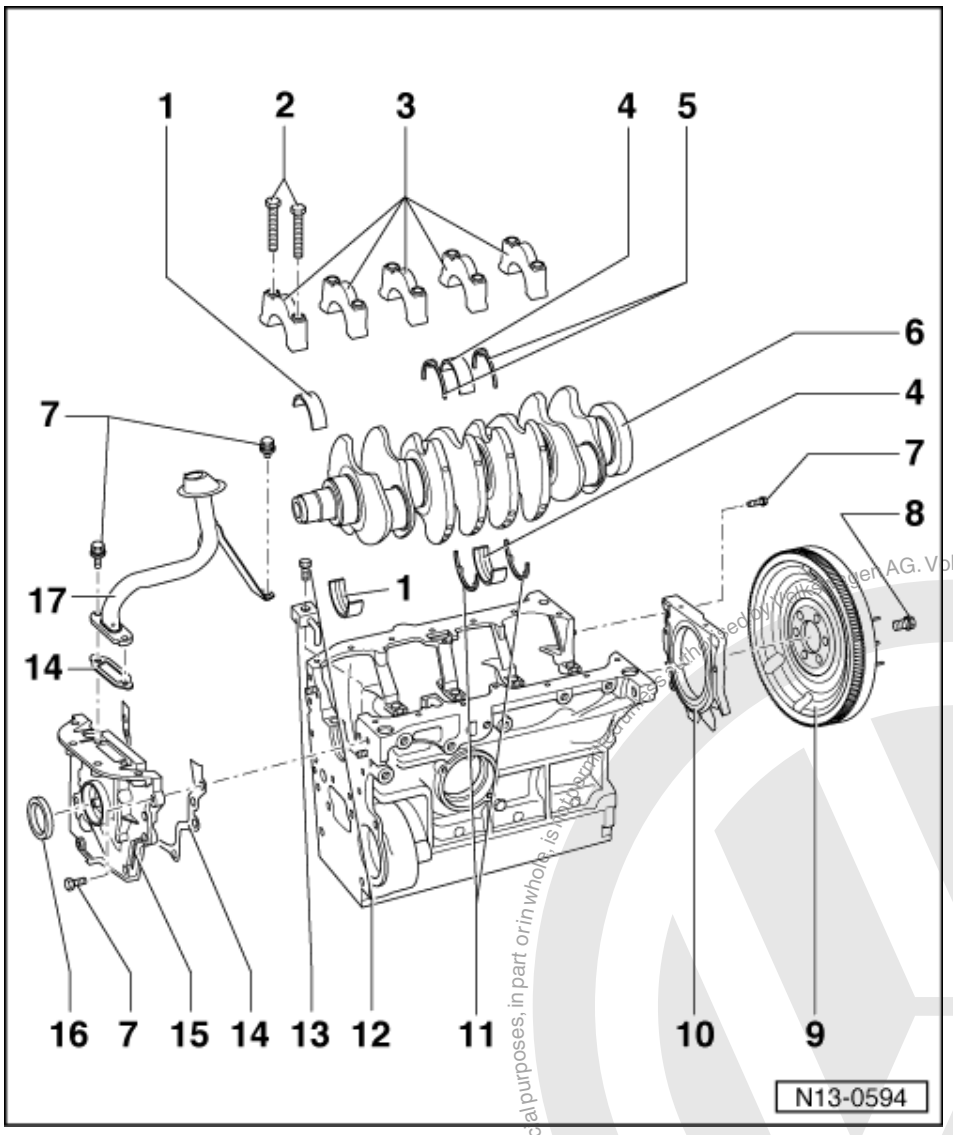

10 Sealing flange with oil seal
- Only renew complete with oil seal and sender wheel
- Removing and installing sealing flange =>Page 29

11 Thrust washer
- For cylinder block, bearing 3

12 25 Nm

13 Oil spray jet
- For piston cooling

14 Gasket
- Renew

15 Sealing flange/oil pump
- Removing and installing oil pump => Page 114

16 Oil seal
- Renewing => Page 28

17 Suction pipe

Protected by copyright. Copying for private or commercial purposes, in part or in whole, is not permitted unless authorised by Volkswagen AG. Volkswagen AG does not guarantee or accept any liability with respect to the correctness of information in this document. Copyright by Volkswagen AG.
satelettronica

2.2 - Crankshaft dimensions

Honing dimension in mm	Crankshaft main journal ø	Conrod journal ø
Basic dimension	-0.017 54.00 -0.032	-0.022 47.80 -0.037
1st undersize	-0.017 53.75 -0.032	-0.022 47.55 -0.037
Stage II	-	-0.022 47.30 -0.037
Stage III	-	-0.022 47.05 -0.037

2.3 - Renewing crankshaft oil seal -belt pulley end-

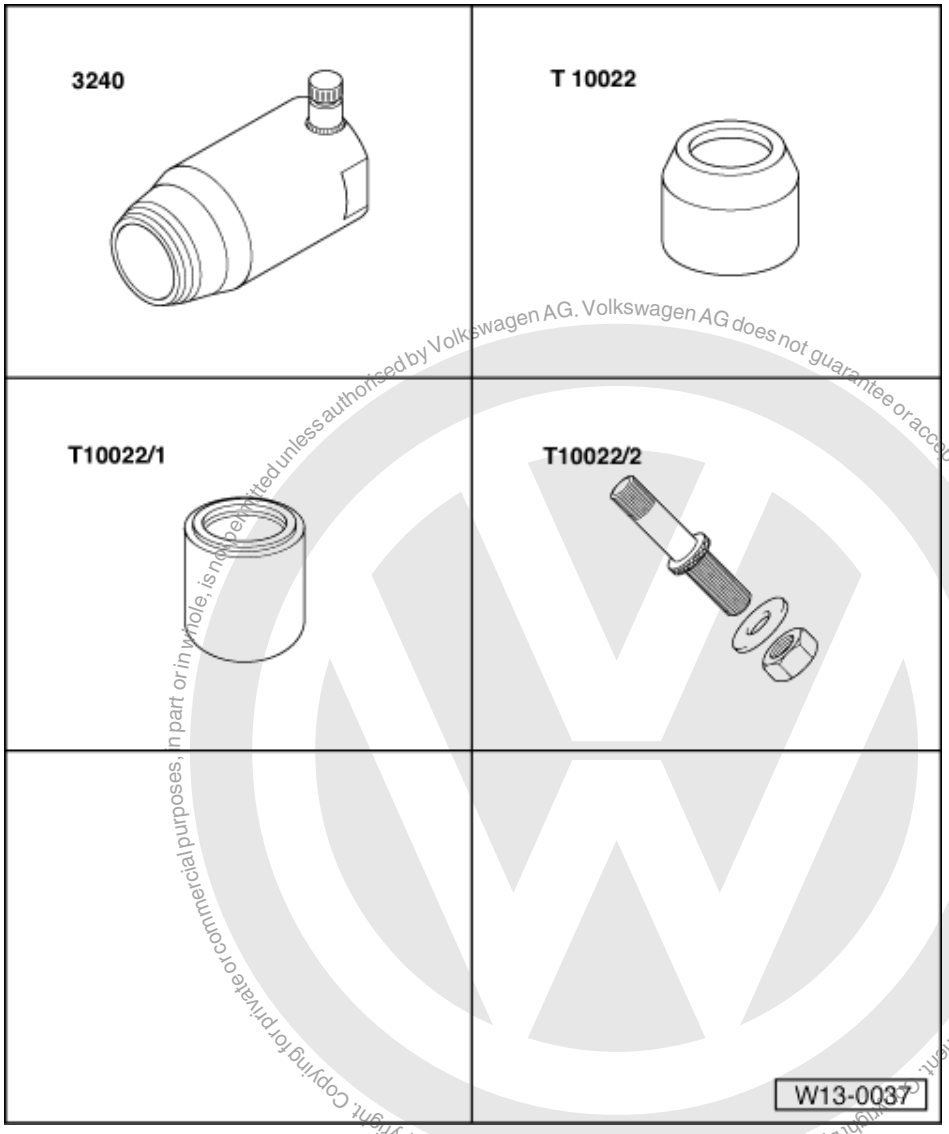

Protected by copyright. Copying for private or commercial purposes, in part or in whole, is not permitted unless authorised by Volkswagen AG. Volkswagen AG does not guarantee or accept any liability with respect to the correctness of information in this document. Copyright by Volkswagen AG.
satelettronica

Special tools, workshop equipment, test and measuring appliances and auxiliary items required

- 3240 Oil seal extractor
- T10022 Sleeve
- T10022/1 Press piece
- T10022/2 Spindle

Removing

- First remove main drive toothed belt
  => Page 58 .
- Then remove the crankshaft toothed belt sprocket.
- To guide oil seal extractor screw crankshaft sprocket securing bolt into crankshaft onto stop.

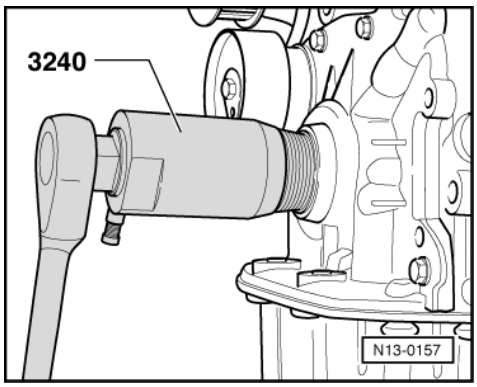

- Unscrew inner part of oil seal extractor 3240 two turns (approx. 3 mm) out of the outer part and lock with knurled screw.
- -> Lubricate threaded head of oil seal extractor, place it in position and exerting firm pressure screw it as far as possible into oil seal.
- Loosen knurled screw and turn inner part against crankshaft until the oil seal is pulled out.

Installing

- Lightly oil sealing lip of oil seal.

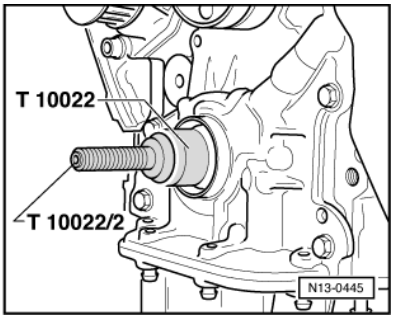

- -> Fit sleeve T10022 onto crankshaft journal and turn spindle T10022/2 in onto stop.
- Slide oil seal over sleeve T10022.

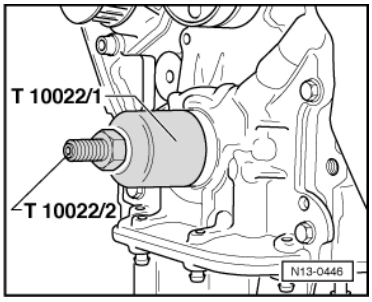

Protected by copyright. Copying for private or commercial purposes, in part or in whole, is not permitted unless authorised by Volkswagen AG. Volkswagen AG does not guarantee or accept any liability with respect to the correctness of information in this document. Copyright by Volkswagen AG.
satelettronica

- -> Press in oil seal onto stop with press piece T10022/1.
- Install main drive toothed belt => Page 58 .

2.4 - Renewing crankshaft sealing flange -flywheel end-

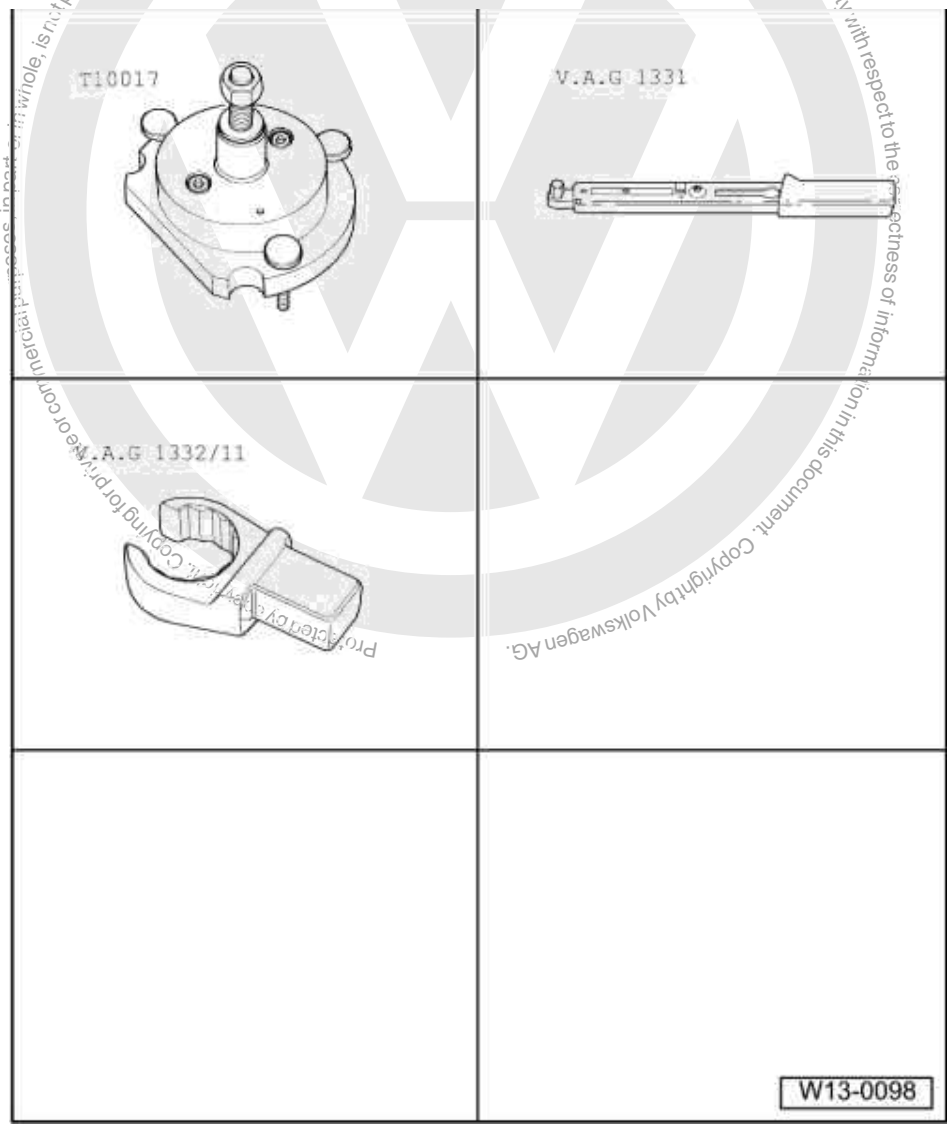

Special tools, workshop equipment, test and measuring appliances and auxiliary items required

- T10017 Assembly device
- V.A.G 1331 Torque wrench (5...50 Nm)
- V.A.G 1332/11 Open ring spanner
- Hexagon bolts (Qty. 3)
  M6 x 35 mm
- Feeler gauge
- Vernier gauge

Pressing out sealing flange with sender wheel

Notes:

- To enable the work sequence to be shown more clearly the sequence is described as for engine removed.

satelettronica

- The work sequence is the same when the engine is in the vehicle and the gearbox removed.

Work sequence

- Remove pressure plate.
- Remove flywheel.
- Remove the intermediate plate.

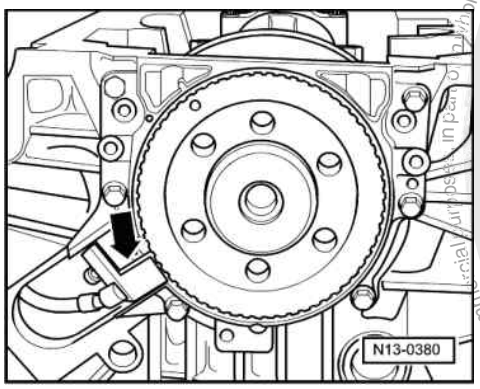

- Set engine to TDC No. 1 cylinder =>Page 50 , Checking valve timing.
- Remove oil sump =>Page 112 .
- -> Remove engine speed sender -arrow-.
- Undo sealing flange securing bolts.

Note:

Sealing flange and sender wheel are pressed off the crankshaft together with Qty. 3 M6 x 35 mm bolts.

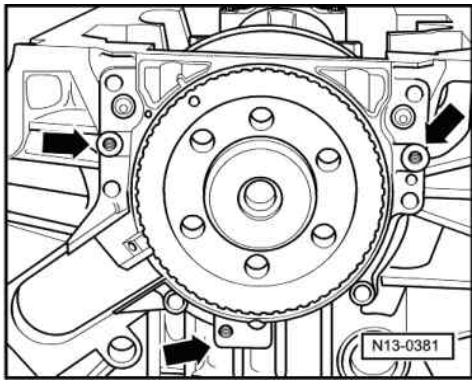

- -> Screw Qty. 3 M6 x 35 mm bolts into the threaded holes -arrows- of the sealing flange.
- Screw the bolts alternately (a 1/2 turn(180°) for each bolt) into the sealing flange and press the sealing flange along with the sender wheel off the crankshaft.

Pressing in sealing flange with sender wheel

Notes:

- Gradual introduction of a new generation of sealing flanges with PTFE seal (Teflon). The sealing flange with spring ring will continue to be offered as spare part.
  When fitting a new sealing flange, be careful to use the same type of sealing flange that was previously fitted.
- The sealing flange with a PTFE sealing ring is equipped with a sealing lip support ring. This support ring serves the function of a fitting sleeve and may not be removed prior to installation.
- Sealing flange and sender wheel must not be separated or twisted after removal from packaging.
- The sender wheel of a sealing flange with spring ring has an Elastomer coating on the sealing surface to crankshaft. This coating must never come into contact with dirt or grease.

- The sender wheel is held in its installation position by a fixture on the assembly device T10017 locating pin.

Protected by copyright. Copying for private or commercial purposes, in part or in whole, is not permitted unless authorised by Volkswagen AG. Volkswagen AG does not guarantee or accept any liability with respect to the correctness of information in this document. Copyright by Volkswagen AG.
satelettronica

- Sealing flange and seal are one unit and must be replaced together with the sender wheel only.

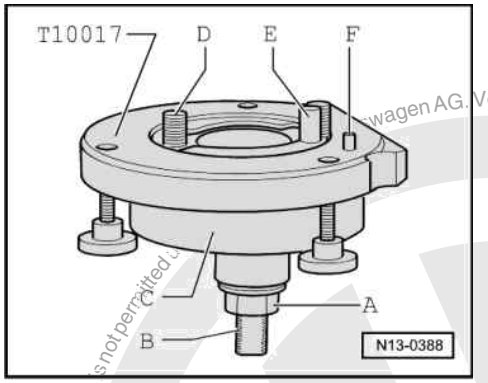

- The assembly appliance T10017 maintains its installation position to the crankshaft via a guide pin which is inserted into a threaded hole in the pressure plate/drive plate.

-> A - Hexagon nut

B - Clamping surface (ground section of spindle)

C - Tool bell housing

D - Socket head bolt

E - Guide pin

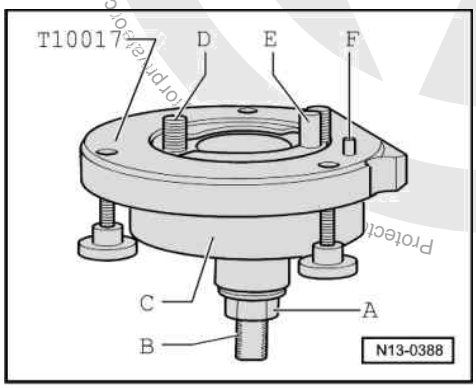

F - Locating pin

A-Assembling sealing flange with sender wheel on assembly appliance T10017

- -> Screw hexagon nut -A- to shortly before the clamping surface (ground section) -B- on the threaded spindle.

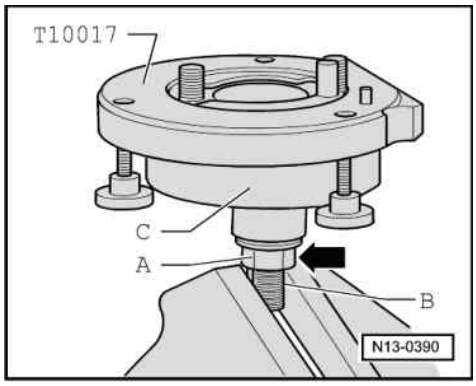

Volkswagen AG. Volkswagen AG does not guarantee or accept any liability with respect to the correctness of information in this document. Copyright by Volkswagen AG.
Protected by copyright. Commercial use or distribution of the data is not permitted unless authorized by Volkswagen AG.
satelettronica

- -> Clamp assembly appliance T10017 in a vice on clamping surface (ground section) on threaded spindle.
- Press assembly bell housing -C- downwards so that it lies on the hexagon nut -A- -arrow-.

Note:

Inner part of assembly appliance and assembly bell housing must be at same height (level).

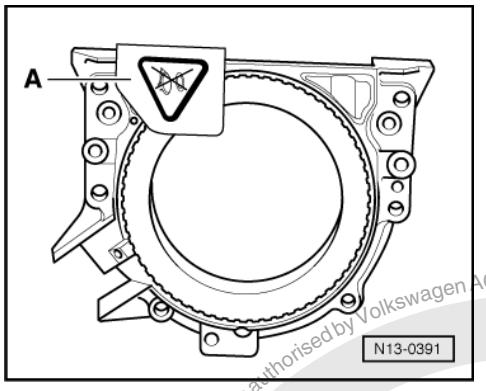

- -> Remove securing clip -A- on new sealing flange.

Note:

The sender wheel must not be taken out of the sealing flange or twisted.

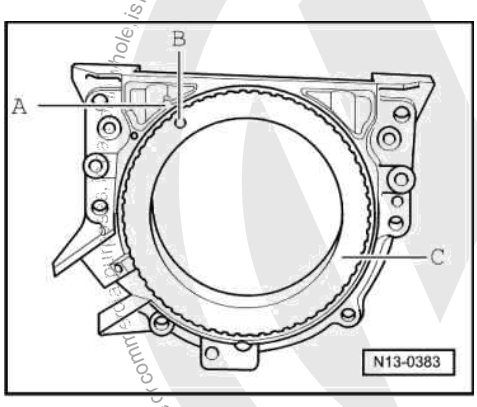

-> The locating hole -B- on the sender wheel -C- must align with the marking -A- on the sealing flange.

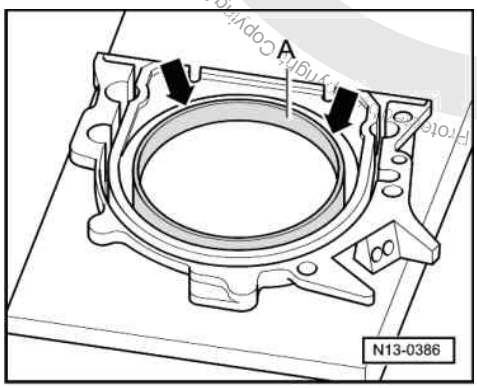

- -> Place the sealing flange (with the forward side downwards) on a clean flat surface.
- Push the sender wheel (sealing lip support ring for PTFE sealing ring) -A- downwards in direction of arrow until it lies on the flat surface.

Copyright by Volkswagen AG. Volkswagen AG does not guarantee or accept any liability with respect to the correctness of information in this document. Copyright by Volkswagen AG.
Photocopying or copying for private or commercial purposes, in part or in whole, is not permitted unless authorised by Volkswagen AG.
satelettronica

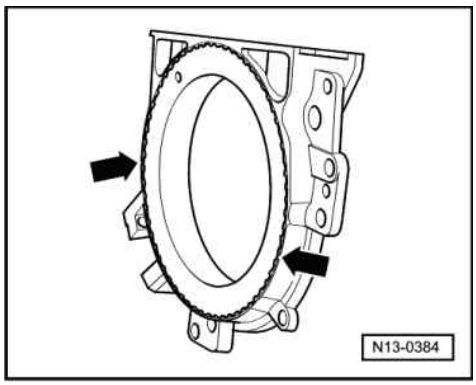

-> The upper edge of the sender wheel and the forward edge of the sealing flange must align -arrows-.

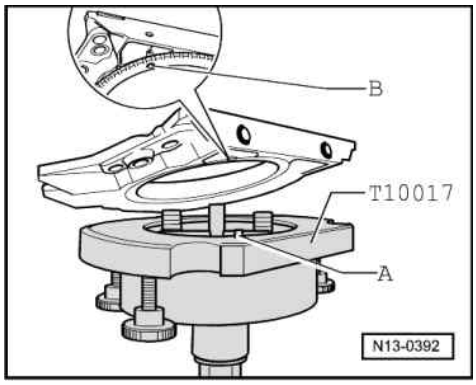

- -> Place the sealing flange, with the forward side on the assembly appliance T10017, so that the locating pin -A- can be inserted in the sender wheel hole -B-.

Note:

Ensure the sealing flange lies flat on the assembly appliance.

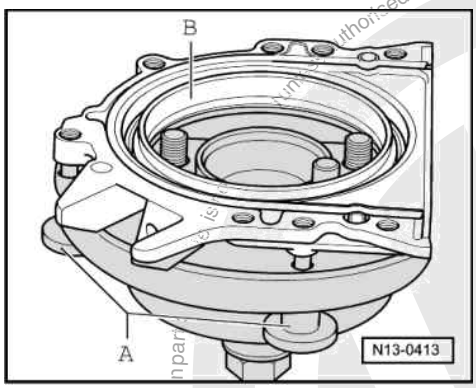

- -> Push the sender wheel -B- (Sealing lip support ring for PTFE sealing ring) onto the surface of the assembly appliance whilst tightening the three knurled screws -A-, so that the locating pin cannot slide out of sender wheel hole.

Note:

Ensure the sender wheel remains fixed on the assembly appliance when installing the sealing flange.

Protected by copyright. Copying for private or commercial purposes, in part, is not authorised by Volkswagen AG. Volkswagen AG does not guarantee or accept any liability with respect to the correctness of information in this document. Copyright by Volkswagen AG.
satelettronica

B-Assembling appliance T10017 with sealing flange on crankshaft flange

Prerequisites

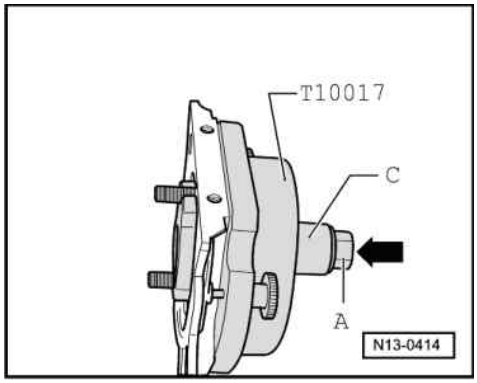

- Crankshaft flange must be free of oil and grease.
- Engine positioned at TDC No. 1 cylinder.

Work sequence

- -> Unscrew hexagon nut -A- to end of threaded spindle.
- Press assembly appliance threaded spindle in direction of arrow, until the hexagon nut -A- lies against the assembly bell housing -C-.

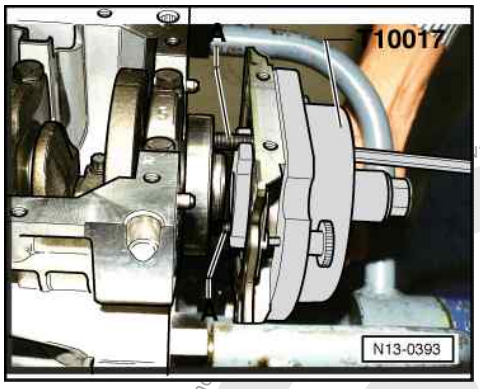

- Align flat side of assembly bell housing towards oil sump side of crankcase sealing surface.
- -> Secure assembly appliance to crankshaft flange with hexagon socket head bolts -A-

Note:

Screw hexagon socket head bolts -A- into crankshaft flange (approx. 5 threads).

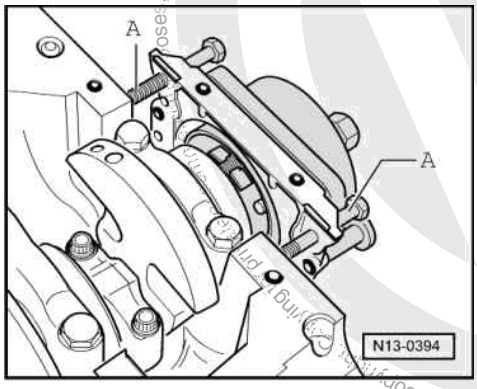

- -> Screw two M6 x 35 mm bolts -A- into cylinder block to guide sealing flange.

Protected by copyright. Copyright by Volkswagen AG. Volkswagen AG does not guarantee or accept any liability with respect to the correctness of information in this document. Copyright by Volkswagen AG.
satelettronica

C-Fitting assembly appliance T10017 onto crankshaft flange

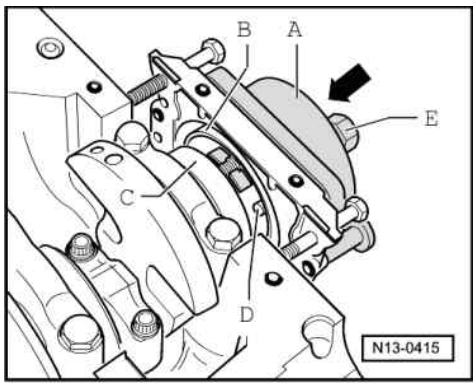

- -> Slide assembly bell housing -A- in direction of arrow by hand until the sender wheel - B- (Sealing lip support ring for PTFE sealing ring) lies against the crankshaft flange -C-.

Note:

The assembly appliance guide pin -D- is guided into threaded hole in crankshaft during the fitting sequence. This ensures the sender wheel reaches its final installation position.

- Hold assembly bell housing in this position and screw both assembly appliance hexagon socket head bolts hand tight.
- Screw hexagon nut -E- onto threaded spindle by hand until it lies against the assembly bell housing -A-.

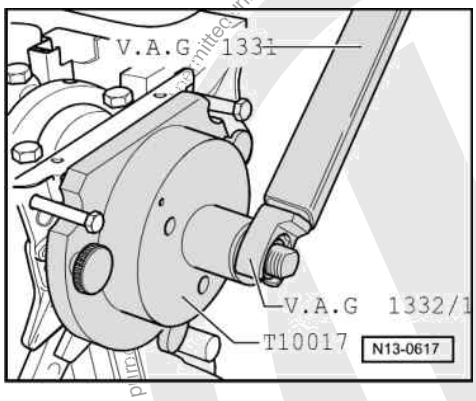

D-Pressing sender wheel onto crankshaft flange with assembly appliance T10017

- -> Tighten assembly appliance hexagon nut using torque wrench V.A.G 1331 and open ring spanner V.A.G 1332/11.
  Tightening torque: 35 Nm

Note:

A small air gap must be present between cylinder block and sealing flange after tightening hexagon nut to 35 Nm.

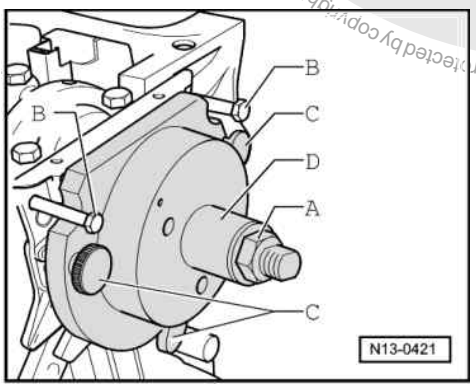

satelettronica

E-Checking sender wheel installation position on crankshaft

- -> Screw hexagon nut -A- to end of threaded spindle.
- Remove the two M6 x 35 mm hexagon bolts -B- from cylinder block.
- Screw the three thumb wheels -C- out of sealing flange.
- Pull assembly appliance assembly bell housing -D- back to hexagon nut -A- (Only for sealing flange with spring ring).

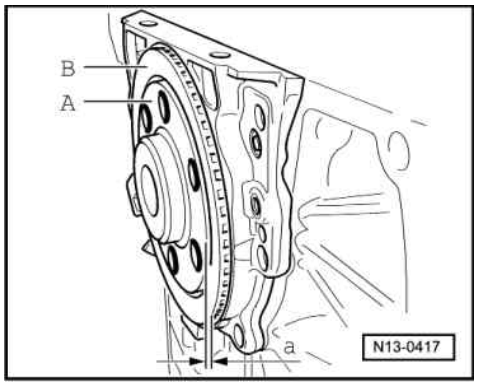

-> The sender wheel has the correct installation position on crankshaft when a gap of
-a- = 0.5 mm
exists between crankshaft flange -A- and sender wheel -B-.

Note:

If the sealing flange has a PTFE sealing ring, completely unbolt the assembly appliance T10017 and remove the sealing lip support ring.

To enable the measurements to be shown more clearly the crankshaft flange is illustrated without the fitted assembly appliance T10017.

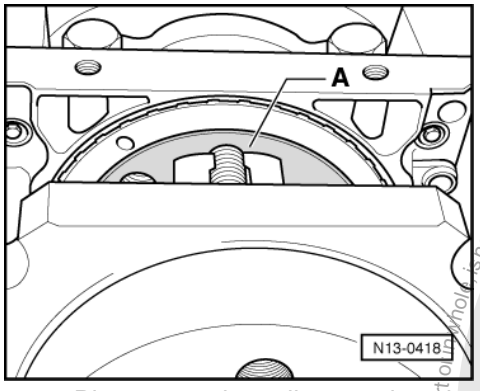

- -> Place a vernier caliper against the crankshaft flange -A- (hatched area).

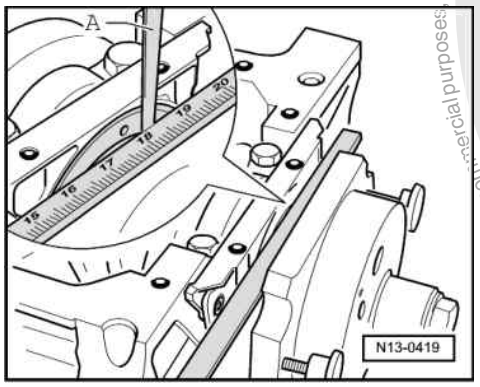

Protected by copyright. Copying for private or commercial purposes, in part or in whole, is not permitted unless authorised by Volkswagen AG. Volkswagen AG does not guarantee or accept any liability with respect to the correctness of information in this document. Copyright by Volkswagen AG.
satelettronica

- -> Measure the distance -a- between vernier caliper and sender wheel with a feeler gauge -A-.

Is measurement -a- too small:

- Re-press sender wheel =>Page 37 .

When dimension -a- is achieved:

- Remove assembly appliance.
- Tighten the new securing bolts for the sealing flange using alternate and diagonal sequence.
  Tightening torque: 10 Nm

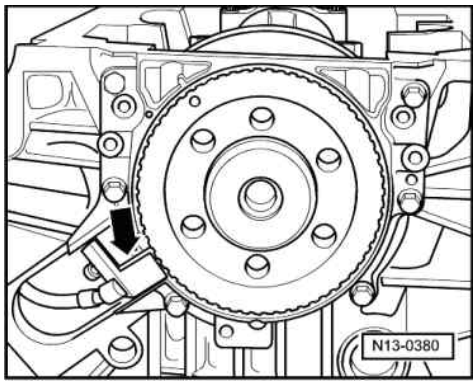

- -> Install engine speed sender -arrow-.
  Tightening torque: 5 Nm
- Install sump => Page 112 .
- Install intermediate plate.
- Install flywheel/drive plate with new bolts.

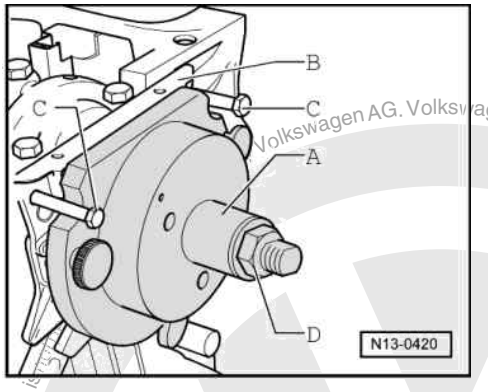

F-Re-pressing sender wheel

-> Slide assembly bell housing -A- to sealing flange -B- by hand.
Screw two M6 x 35 mm bolts -C- into cylinder block to guide sealing flange -B-.
Screw hexagon nut -D- along threaded spindle, by hand, until it contacts the assembly bell housing -A-.

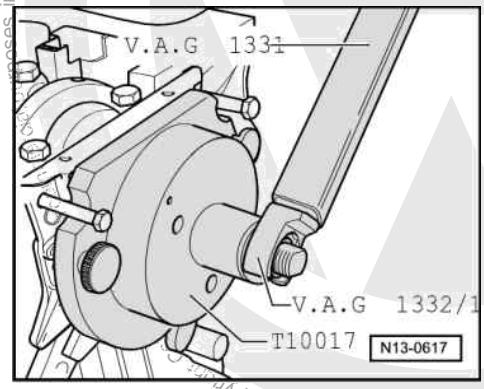

satelettronica
Volkswagen AG. Volkswagen AG does not guarantee or accept any liability with respect to the correctness of information in this document. Copyright by Volkswagen AG.
Protected by copyright. Copying for private or commercial purposes, in part or in whole, is not permitted unless authorised by Volkswagen AG.

- -> Tighten assembly appliance hexagon nut using torque wrench V.A.G 1331 and open ring spanner V.A.G 1332/11.
  Tightening torque: 40 Nm
- Check installation position of sender wheel on crankshaft again => Page 36 .

If dimension -a- is too small again:
- Tighten hexagon nut to
  45 Nm.
- Check installation position of sender wheel on crankshaft again => Page 36 .

3 - Dismantling and assembling pistons and conrods

3.1 - Dismantling and assembling pistons and conrods

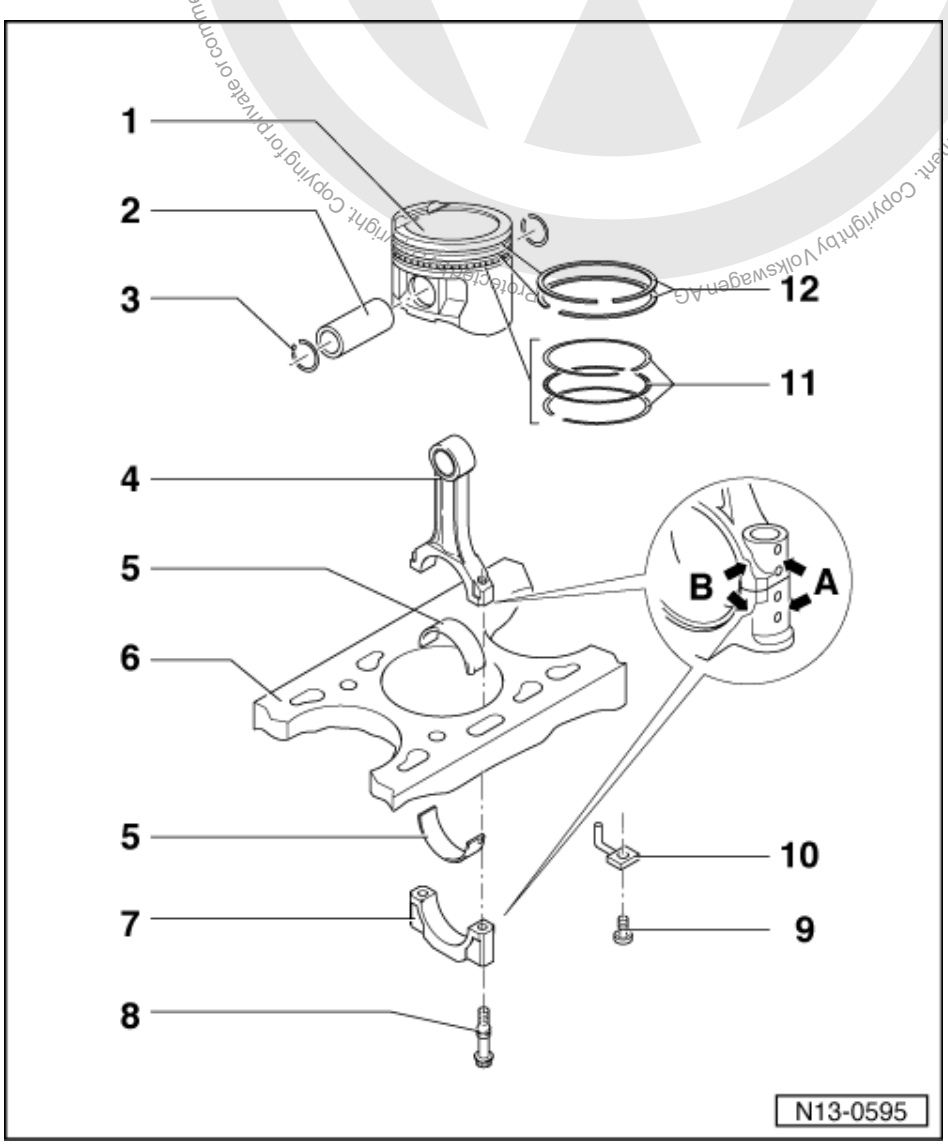

1 Piston
- Checking => Fig. 3
- Mark installation position and cylinder number
- Arrow on piston crown points to pulley end
- Install using piston ring clamp

2 Piston pin
- If difficult to remove, heat piston to 60 °C
- Remove and install with10-206

satelettronica

3 Circlip

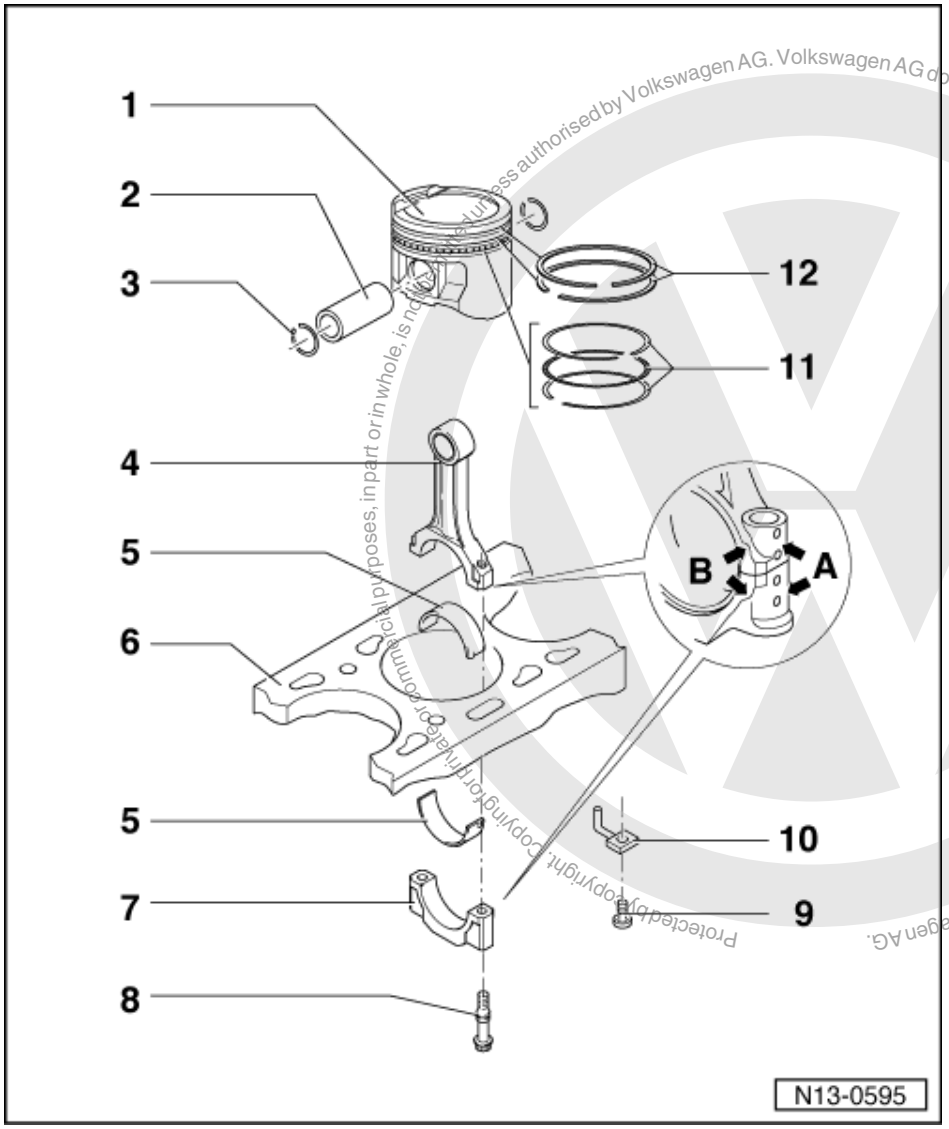

Protected by copyright. Copying for private or commercial purposes, in part or in whole, is not permitted unless authorised by Volkswagen AG. Volkswagen AG does not guarantee or accept any liability with respect to the correctness of information in this document. Copyright by Volkswagen AG.

satelettronica

4 Conrod
- Only renew as a set
- Mark cylinder number -A-
- Installation position:
  Marking -B- faces towards pulley end
- Guided axially via piston

5 Bearing shell
- Note installation position
- Do not interchange used bearing shells
- Check radial clearance with Plastigage:
  New: 0.022...0.063 mm
  Wear limit: 0.091 mm
  Do not rotate crankshaft when checking radial clearance

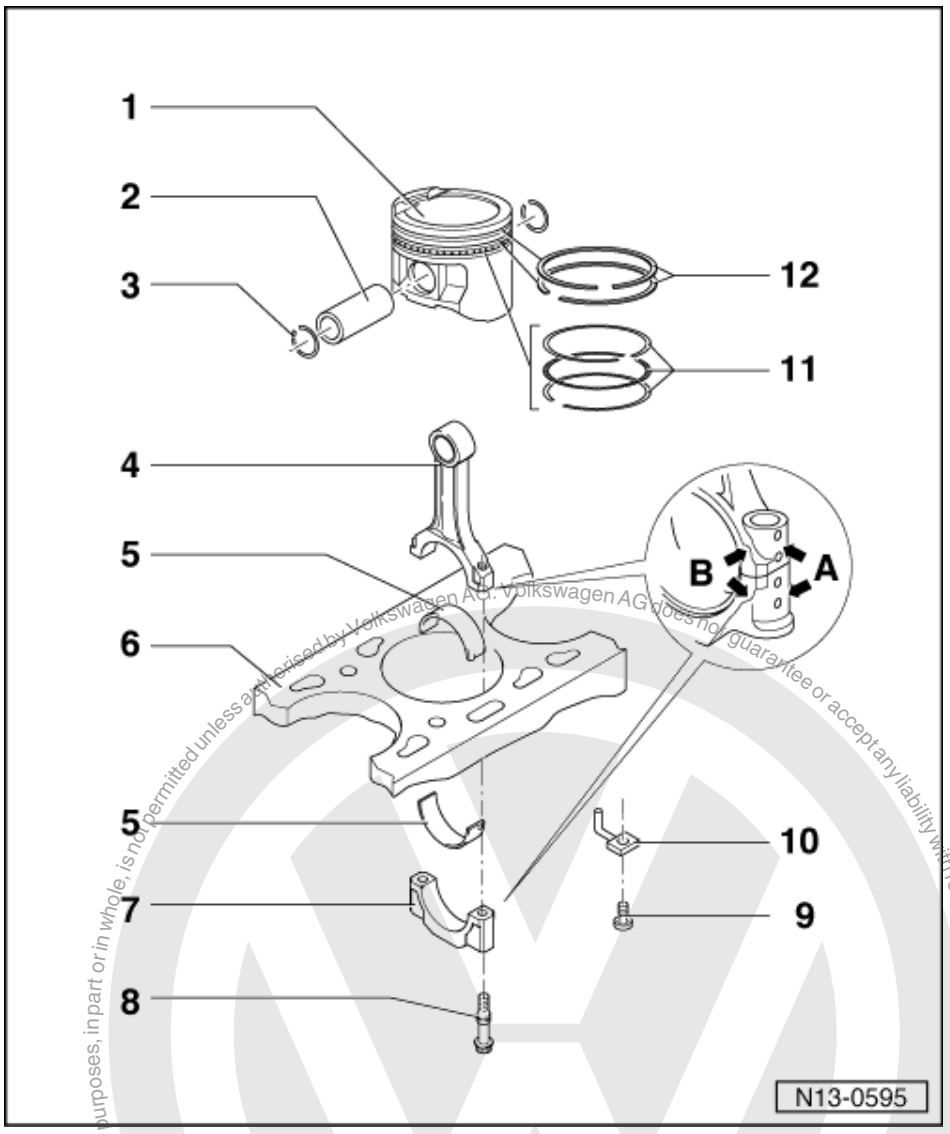

6 Cylinder block
- Checking cylinder bores
  =>Fig. 4
- Piston and cylinder dimensions
  =>Page 44

7 Conrod bearing cap
- Note installation position
- The caps only fit in one position and only on the appropriate con-rod, this is due to the breaking procedure (cracking) separating the cap from the con-rod

8 Conrod bolt, 30 Nm + 1/4 turn (90 °) further
- Renew
- Oil threads and contact surface
- To measure radial clearance tighten to 30 Nm but not further

Protected by copyright. Copying for private or commercial purposes, in part or in whole, is not permitted unless authorised by Volkswagen AG. Volkswagen AG does not guarantee or accept any liability with respect to the correctness of information in this document. Copyright by Volkswagen AG.
satelettronica

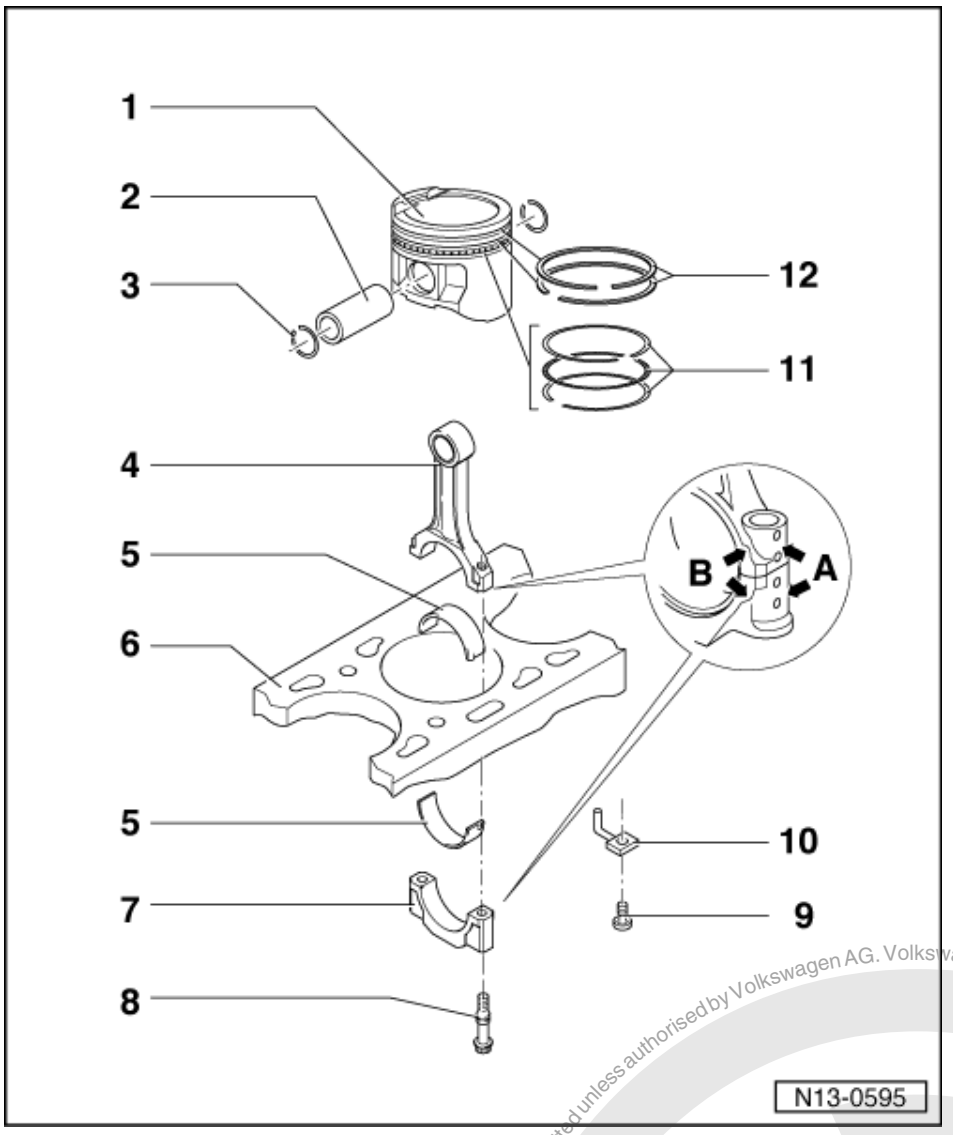

9 25 Nm

10 Oil spray jet

- For piston cooling

11 Oil scraper rings

- Carefully remove and install 3-part oil scraper rings by hand
- "TOP" faces towards piston crown
- Checking ring gap=> Fig. 1
- Checking ring to groove clearance => Fig. 2

12 Compression rings

- Offset gaps by 120 °
- Remove and install compression rings with piston ring pliers
- "TOP" faces towards piston crown
- Checking ring gap=> Fig. 1
- Checking ring to groove clearance => Fig. 2

Protected by copyright. Copying for private or commercial purposes, in part or in whole, is not permitted unless authorised by Volkswagen AG. Volkswagen AG does not guarantee or accept any liability with respect to the correctness of information in this document. Copyright by Volkswagen AG.
satelettronica

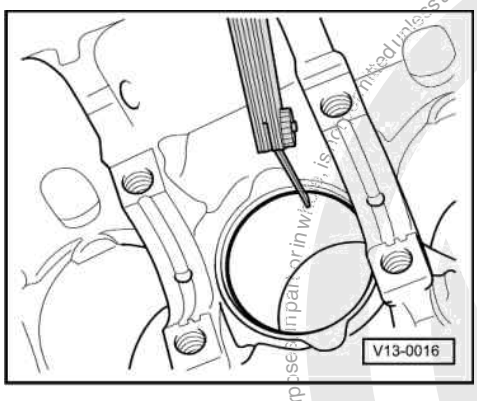

-> Fig. 1 Checking piston ring gap

- Push ring squarely from above down to approx. 15 mm from bottom end of cylinder.

Piston ring Dimensions in mm	New	Wear limit
1. Compression ring	0.20...0.50	1.0
2. Compression ring	0.40...0.70	1.0
Oil scraper ring	0.40...1.40	---1)

1) No wear limit details

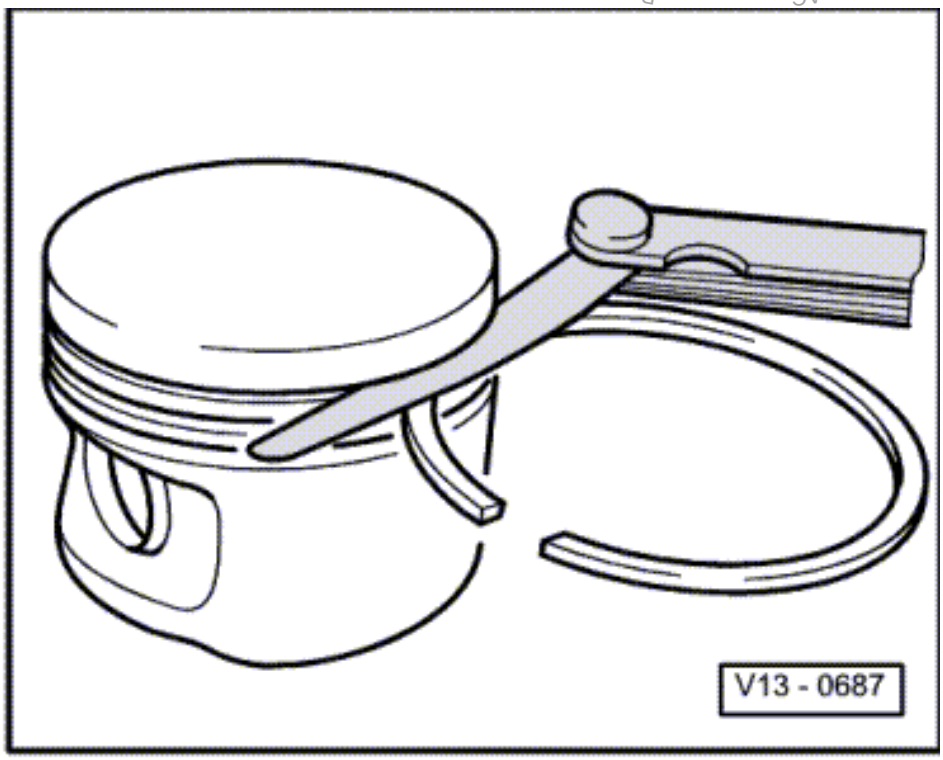

-> Fig. 2 Checking ring to groove clearance

Clean groove before check.

Piston ring Dimensions in mm	New	Wear limit
1. Compression ring	0.04...0.08	0.15

Protected by copyright. Copying for private or commercial purposes, in part or in whole, is not permitted unless authorised by Volkswagen AG. Volkswagen AG does not guarantee or accept any liability with respect to the correctness of information in this document. Copyright by Volkswagen AG.
satelettronica

Piston ring Dimensions in mm	New	Wear limit
2. Compression ring	0.04...0.08	0.15
Oil scraper ring	Cannot be measured	

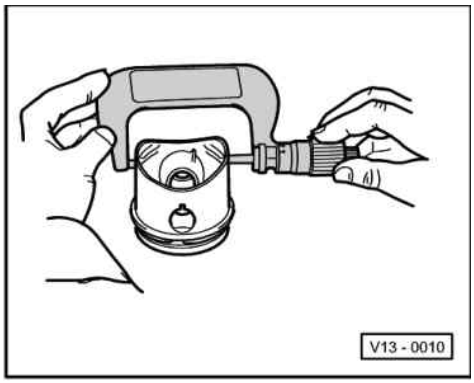

-> Fig. 3 Checking piston

Special tools, testers and auxiliary items

- Micrometer 75...100 mm

- Approx. 10 mm from lower edge and offset 90 ° to piston pin axis. Deviations from nominal dimensions max. 0.04 mm

  Nominal dimension => Page 44 ; Piston and cylinder dimensions

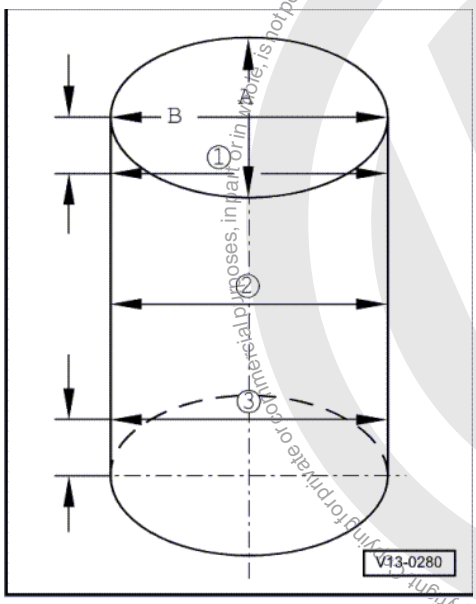

-> Fig. 4 Checking cylinder bores

Special tools, testers and auxiliary items

- Internal dial gauge 50...100 mm

- Take measurements at 3 positions in both lateral -A- and longitudinal -B- directions, as illustrated. Deviation from nominal dimension

Protected by copyright. Copying for private or commercial purposes, in part or in whole, is not permitted unless authorised by Volkswagen AG. Volkswagen AG does not guarantee or accept any liability with respect to the correctness of information in this document. Copyright by Volkswagen AG.
satelettronica

max. 0.08 mm

Nominal dimension => Page 44 ; Piston and cylinder dimensions

Note:

Measuring the cylinder bores must not be done when the cylinder block is mounted on a repair stand with adapter bracket VW 540, as incorrect measurements would then be possible.

3.2 - Piston and cylinder dimensions

Honing dimension		Piston-ø	Cylinder bore-ø
Basic dimen.	mm	76.485	76.51
1st oversize	mm	76.735	76.76
2nd oversize	mm	76.985	77.01
3rd oversize	mm	77.235	77.26

Protected by copyright. Copying for private or commercial purposes, in part or in whole, is not permitted unless authorised by Volkswagen AG. Volkswagen AG does not guarantee or accept any liability with respect to the correctness of information in this document. Copyright by Volkswagen AG.

satelettronica

15 - Cylinder head, Valve gear

1 - Removing and installing cylinder head

1.1 - Removing and installing cylinder head

Checking compressions=> Page 72

Notes:

- When installing an exchange cylinder head, all the contact surfaces between the support elements, roller rocker fingers and the cams must be oiled before installing the camshaft housing.
- If the cylinder head is replaced, all the coolant in the system must also be renewed.

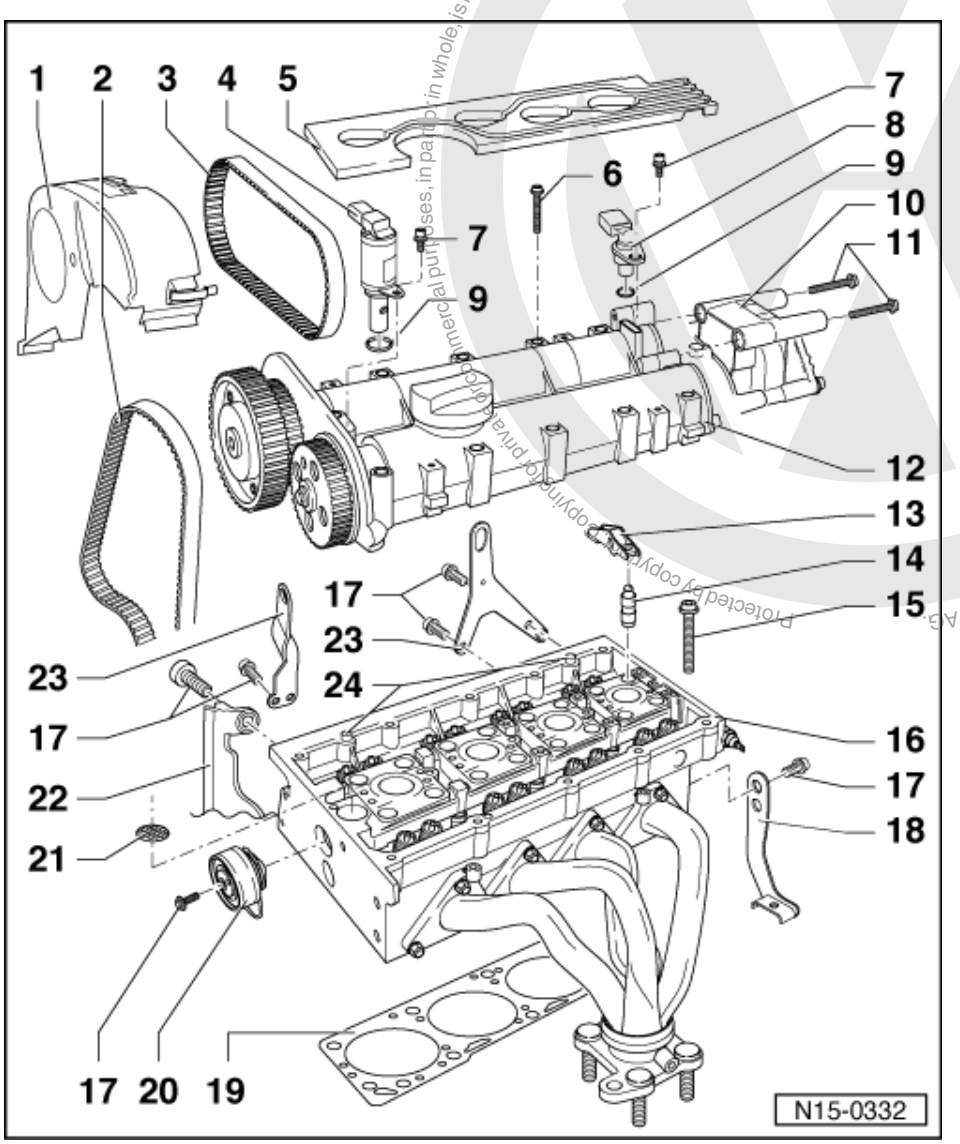

1 Toothed belt guard - upper part

2 Main drive toothed belt

- Check for wear
- Do not kink
- Removing, installingand tensioning
  => Page 58

Protected by copyright. Copying for private or commercial purposes, in part or in whole, is not permitted unless authorised by Volkswagen AG. Volkswagen AG does not guarantee or accept any liability with respect to the correctness of information in this document. Copyright by Volkswagen AG.
satelettronica

3 Coupling drive toothed belt
- Check for wear
- Do not kink
- Removing, installing and tensioning
  => Page 58

4 Camshaft adjuster valve (N205)
- Checking => Page 85

5 H.T. cable guide

6 10 Nm + 1/4 turn (90 °) further
- Renew
- Tighten from centre outwards

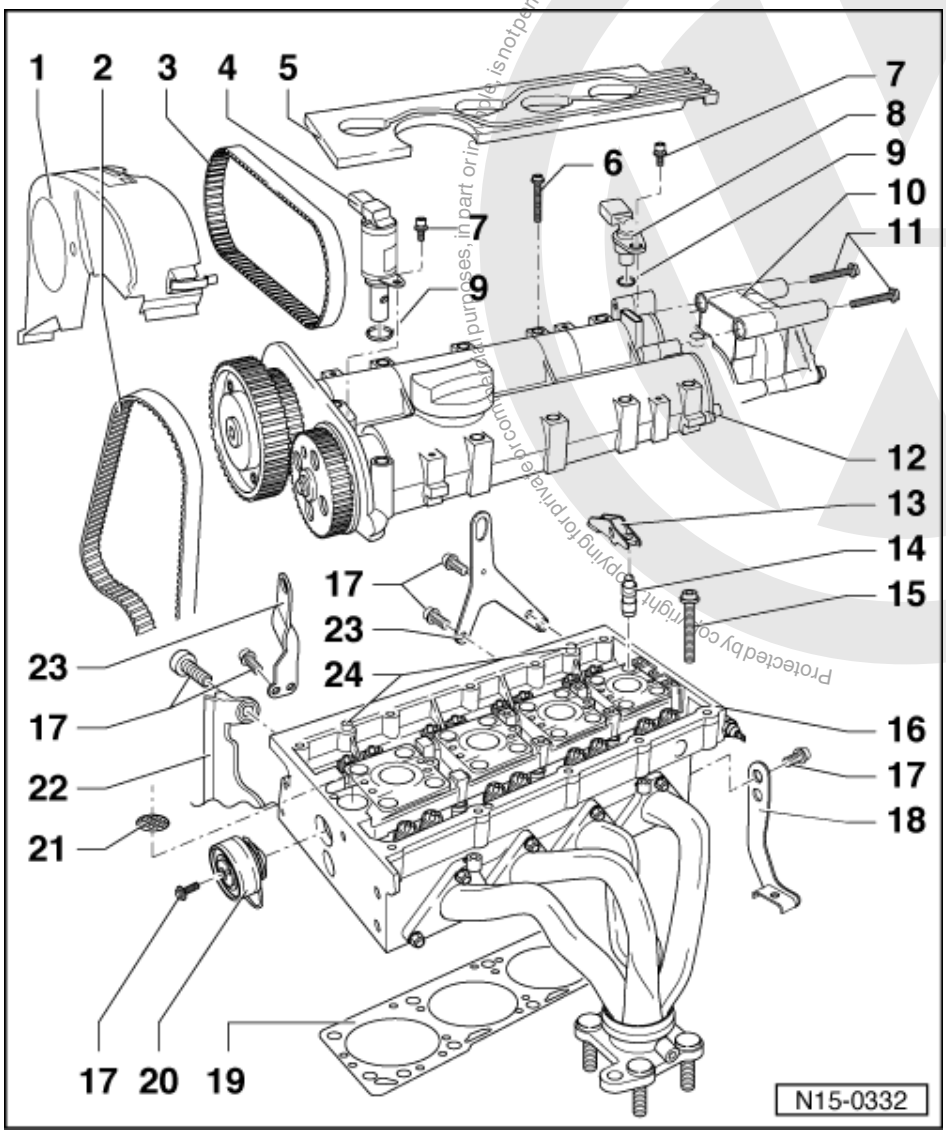

7 10 Nm

8 Hall sender (G40)

9 O-ring
- Renew if damaged or leaking
- Oil before assembling

10 Ignition transformer (N152)
- Checking:

Protected by copyright. Copying for private or commercial purposes, in part or in whole, is not permitted unless authorised by Volkswagen AG. Volkswagen AG does not guarantee or accept any liability with respect to the correctness of information in this document. Copyright by Volkswagen AG.
satelettronica

=> Repair Group 01; Fault memory; Interrogating and erasing fault memory Fault memory Interrogating and erasing fault memory

11 10 Nm

- For ignition transformer and inlet camshaft end cover

12 Camshaft housing

- Removing and installing
  => Page 65
- Remove remnants of old sealant
- Coat with AMV 188 003 before fitting
- When installing fit vertically from above onto studs and dowel pins

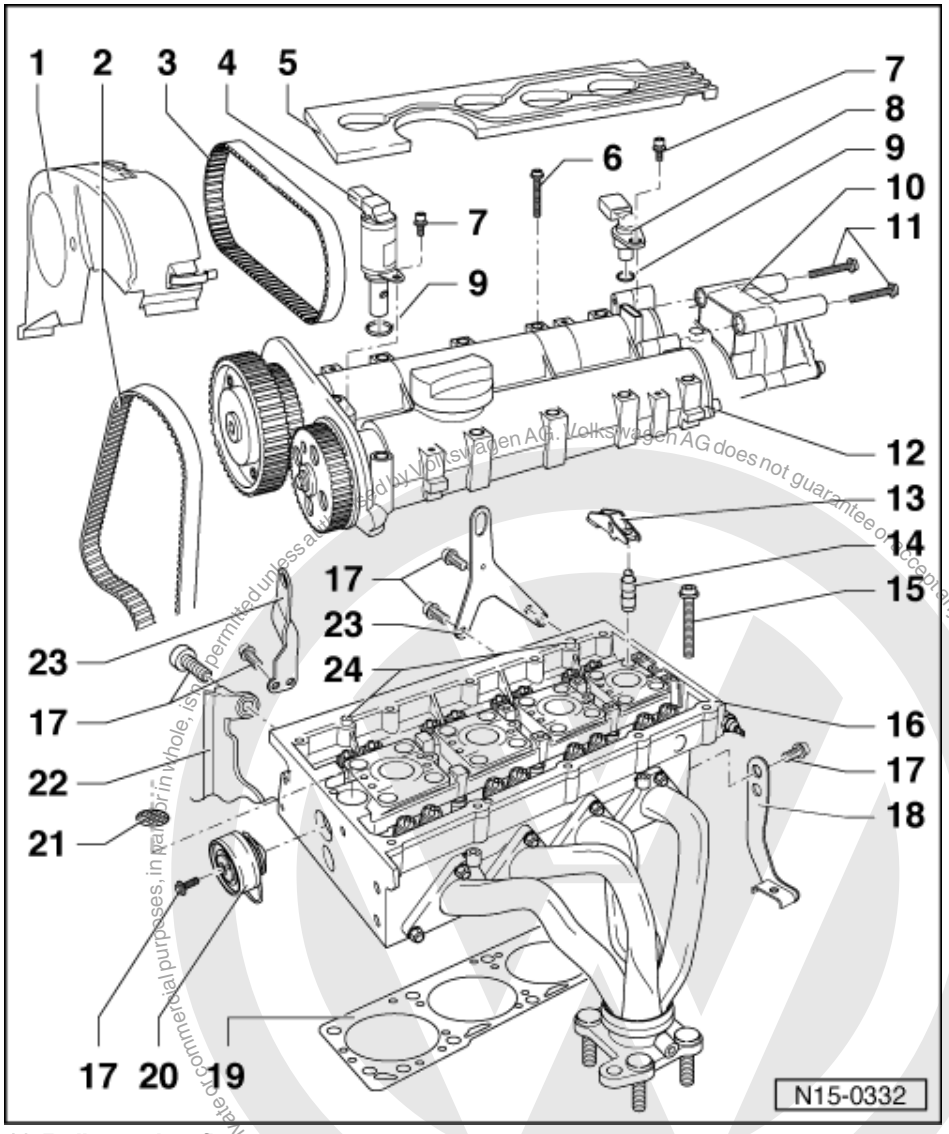

13 Roller rocker finger

- Check for ease of movement
- Check bearing for ease of movement
- Oil contact surface
- Use securing clip to clip onto support element when installing

14 Support element

- Do not interchange
- With hydraulic valve clearance compensation
- Before installing check camshaft axial clearance => Page 82 , Fig. 2
- Oil contact surface

15 Cylinder head bolt

- Renew

satelettronica

- Note installation instructions and sequence when loosening and tightening
  => Page 68

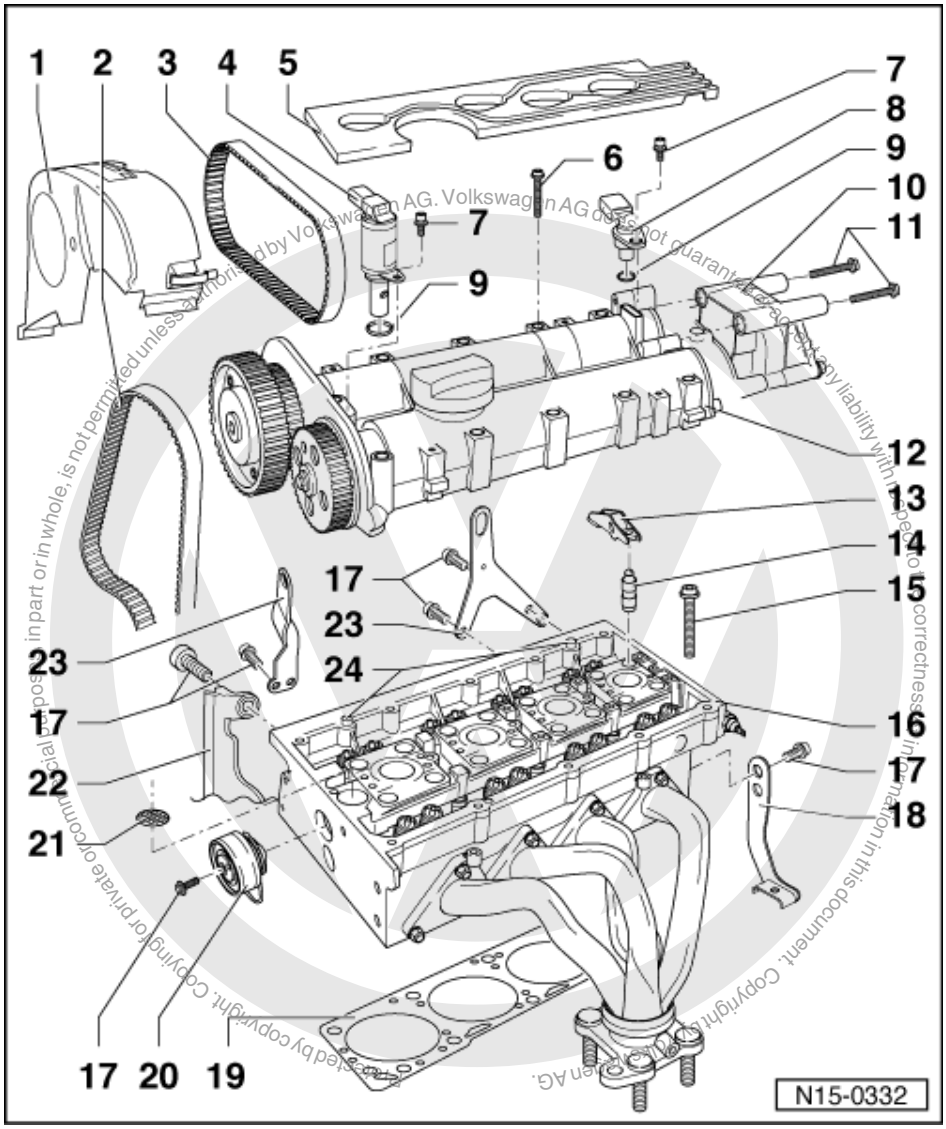

16 Cylinder head

- Removing and installing
  => Page 68
- Check for distortion => Fig. 1
- After replacing renew the complete coolant

17 20 Nm

18 Retainer

- For oil cooler coolant pipes

19 Cylinder head gasket

- Renew
- Metal gasket
- After replacing renew the complete coolant

20 Coupling drive tensioning roller

- Checking => Page 53
- Tensioning toothed belts
  => Page 58

21 Oil strainer

- Clean strainer if soiled

satelettronica

- Note installation position

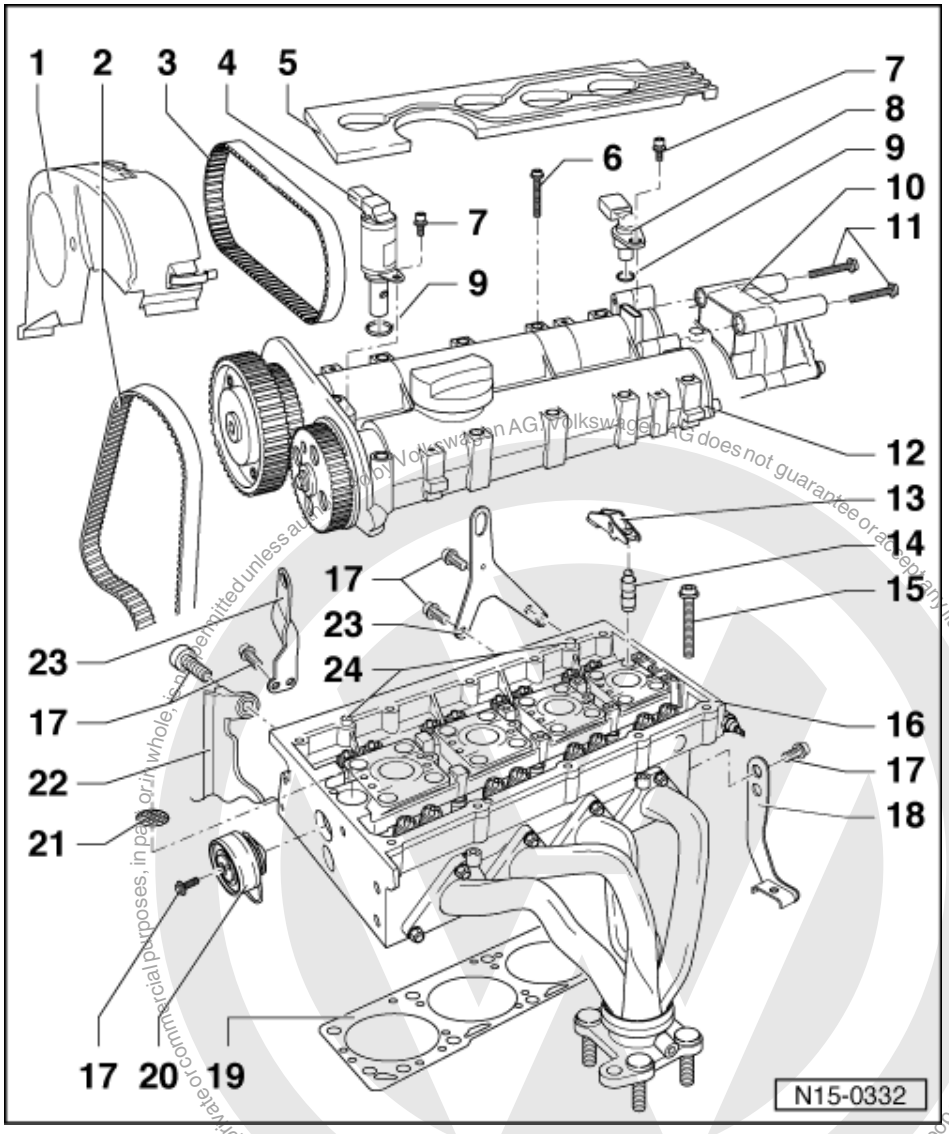

22 Rear toothed belt guard
23 Lifting eye
24 Fitted pins

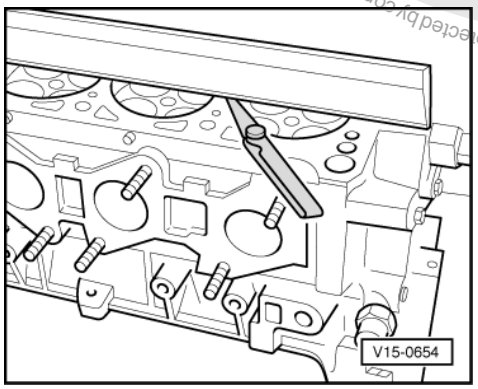

Copyright by Volkswagen AG. Volkswagen AG does not guarantee or accept any liability with respect to the correctness of information in this document. Copyright by Volkswagen AG. Protected by copyright. Copying for private or commercial purposes, in part or in whole, is not permitted unless authorised by Volkswagen AG.
satelettronica

-> Fig. 1 Checking cylinder head for distortion

Max. permissible distortion: 0.05 mm

1.2 - Checking valve timing

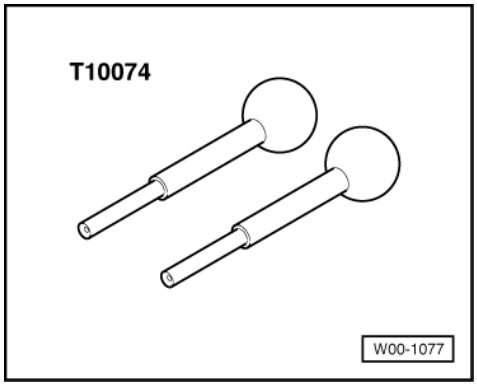

- T10074 Locking pins

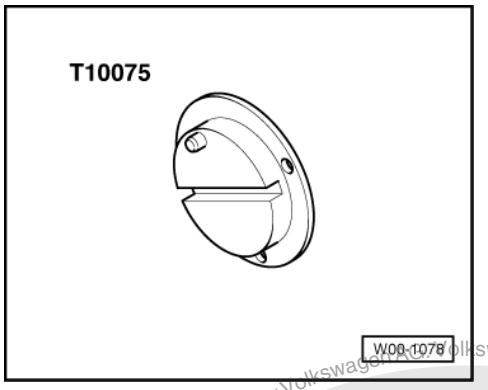

- T10075 Locating flange

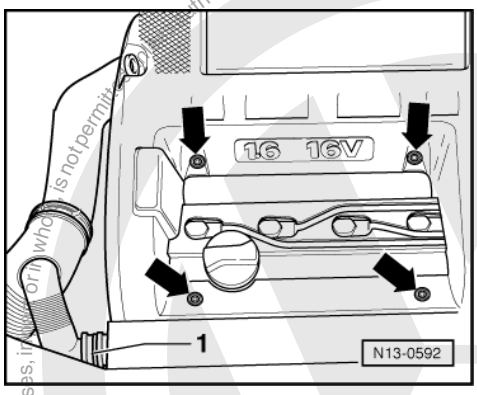

- -> Remove cover above camshaft housing -arrows-.

satelettronica
Protected by copyright. Copying for private or commercial purposes, in part or in whole, is not permitted unless authorised by Volkswagen AG. Volkswagen AG does not guarantee or accept any liability with respect to the correctness of information in this document. Copyright by Volkswagen AG.

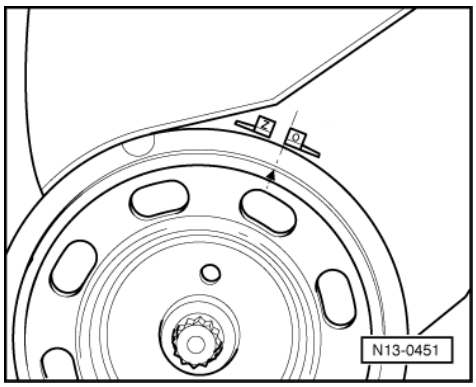

- Remove the toothed belt guard upper part.
- -> Position the crankshaft to top dead centre No. 1 cylinder. The notch on the pulley must align with the edge of the -O- mark.

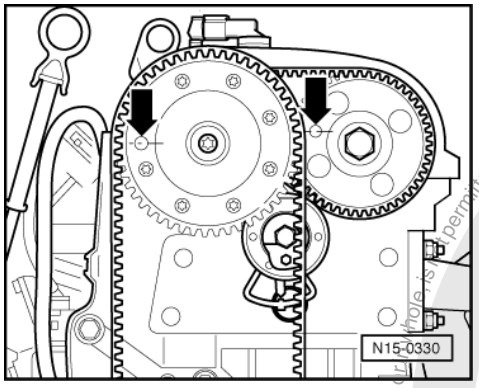

- -> The locking pin holes in the camshaft pulleys must align with the fitting holes in the camshaft housing -arrows-.

Note:

If the locking pin holes are positioned to the outside on the toothed belt pulleys, the crankshaft must be turned one revolution further.

Lock the adjuster for the camshafts and the exhaust camshaft sprocket with the locking pins T 10074 as follows:

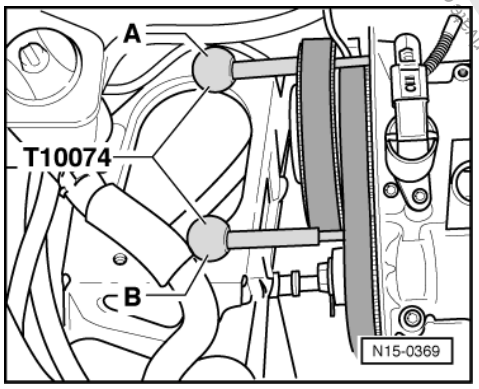

- -> First guide locking pin -A- through the locating hole of the camshaft adjuster and then the locking pin -B- for the exhaust camshaft sprocket onto stop in the camshaft housing fitting holes.

Protected by copyright. Copying for private or commercial purposes, in part or in whole, is not permitted unless authorised by Volkswagen AG. Volkswagen AG does not guarantee or accept any liability with respect to the correctness of information in this document. Copyright by Volkswagen AG.
satelettronica

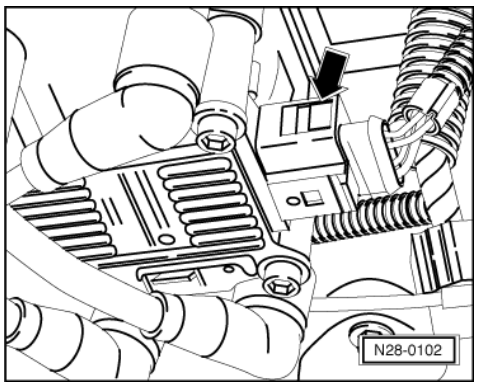

- -> Pull 4 pin connector off ignition transformer -arrow-.
- Remove the ignition transformer and the inlet camshaft end cover.

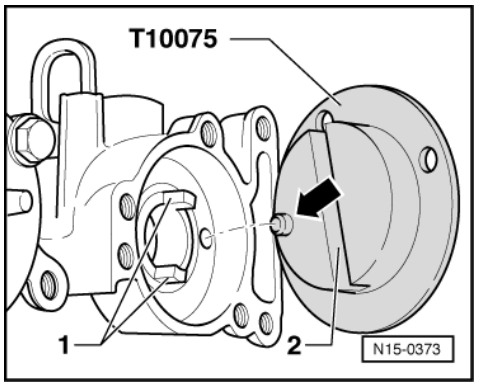

- -> Insert coupling side of locking flange T10075 into the inlet camshaft housing so that the locking pin -arrow- of locking flange locates in the small hole of the inlet camshaft axial bearing, and the lugs of the camshaft -1- locate in the recess of the locking flange -2-.

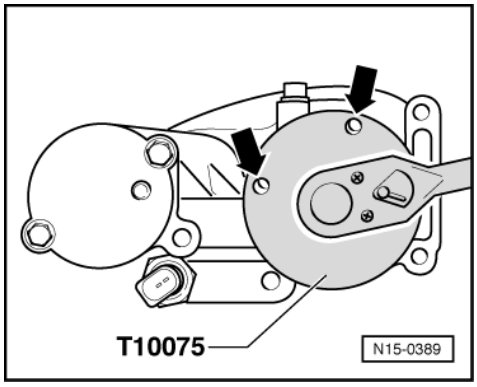

- -> Carefully turn the inlet camshaft opposite to the engine direction of rotation onto stop and hold using the hexagon on the locking flange T10075.

In this position the tool must be in the same position as that achieved during the adjustment process i.e. the holes in the locking flange T10075 must align with the threaded holes in the camshaft housing -arrows-.

The rest of the assembly is basically a reverse of the dismantling sequence.

Protected by copyright. Copying for private or commercial purposes, in part or in whole, is not permitted unless authorised by Volkswagen AG. Volkswagen AG does not guarantee or accept any liability with respect to the correctness of information in this document. Copyright by Volkswagen AG.
satelettronica

1.3 - Checking semi-automatic toothed belt tensioning roller

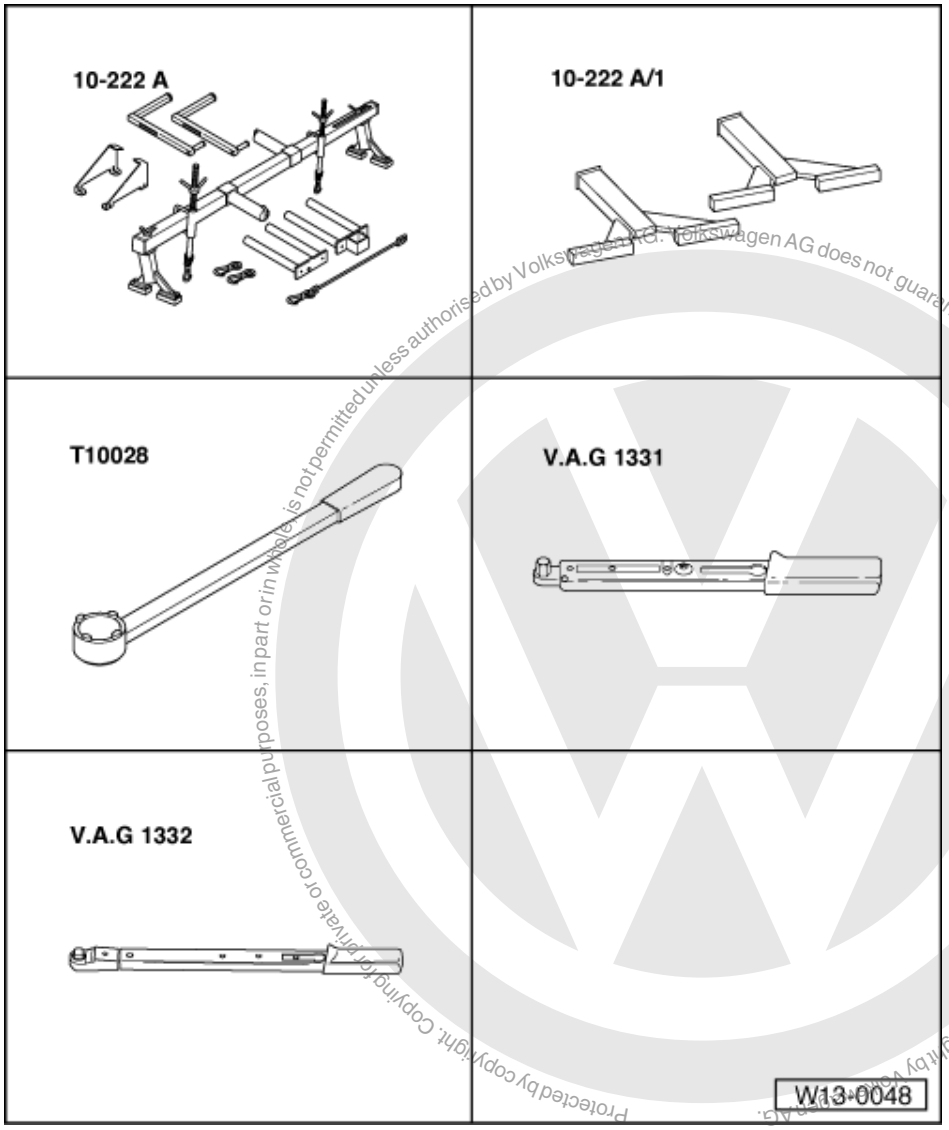

Protected by copyright. Copying for private or commercial purposes, in part or in whole, is not permitted unless authorised by Volkswagen AG. Volkswagen AG does not guarantee or accept any liability with respect to the correctness of information in this document. Copyright by Volkswagen AG.

satelettronica

Special tools, workshop equipment, test and measuring appliances and auxiliary items required

- 10-222A Support bracket
- 10-222A/1 Support for support bracket
- T 10028 Counter-hold
- V.A.G 1331 Torque wrench (5...50 Nm)
- V.A.G 1332 Torque wrench (40...200 Nm)

Checking main drive tensioning roller:

Test sequence

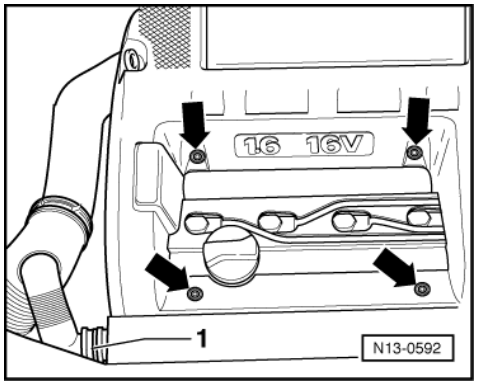

- -> Remove cover above camshaft housing -arrows-.
- Remove air cleaner:

=> Repair group 24; Servicing injection; Dismantling and assembling air cleaner Servicing injection Dismantling and assembling air cleaner

- Remove the toothed belt guard upper part.

The engine must be lowered slightly as follows to enable the crankshaft sprocket to be removed:

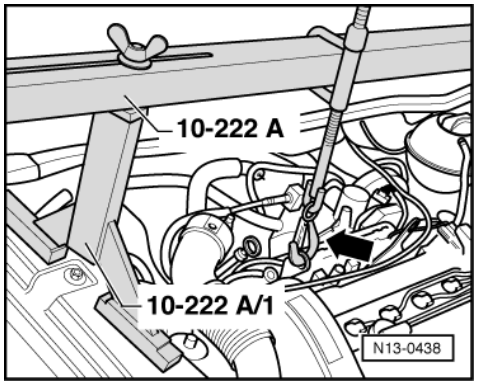

- -> Fit support 10-222A with legs 10-222A/1 as shown.
- Remove power assisted steering reservoir and place to side.
- Remove air inlet to air cleaner.
- Remove upper securing bolt from lower toothed belt guard under console.

- Take-up weight of engine, and remove console as follows:

Protected by copyright. Copying for private or commercial purposes, in part or in whole, is not permitted unless authorised by Volkswagen AG. Volkswagen AG does not guarantee or accept any liability with respect to the correctness of information in this document. Copyright by Volkswagen AG.
satelettronica

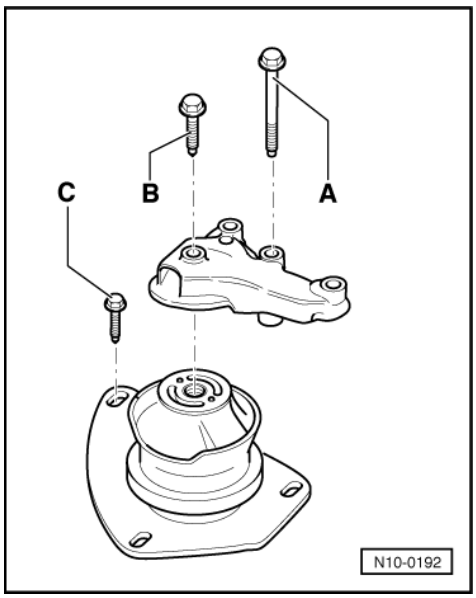

- -> Remove securing bolts A, B and C
  and remove complete assembly mounting.
- Remove console from cylinder head.
- Lower engine until the pulley securing bolt is accessible.
- Mark the direction of rotation of the ribbed belt and remove belt as follows.

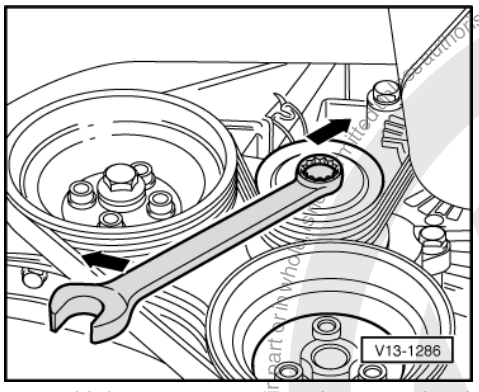

- -> Using a spanner on the securing bolt swivel tensioning roller in direction of arrow.
- Remove ribbed belt.
- Remove engine bracket on cylinder head.

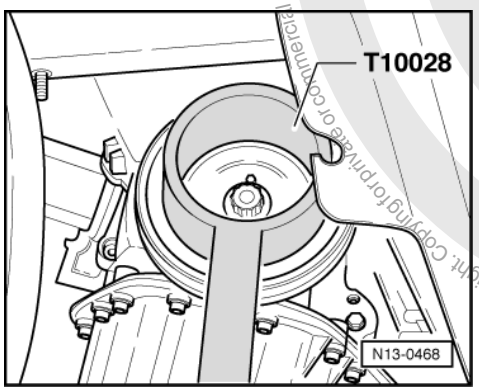

- -> Now loosen the securing bolt for the pulley/toothed belt sprocket. To do this hold the pulley with counter-hold tool T10028.
- Remove pulley. Refit securing bolt with several washers to secure toothed belt sprocket.

Protected by copyright. Copying for private or commercial purposes, in part or in whole, is not permitted unless authorised by Volkswagen AG. Volkswagen AG does not guarantee or accept any liability with respect to the correctness of information in this document. Copyright by Volkswagen AG.
satelettronica

- Now turn the crankshaft two turns in engine direction of rotation until it is again at top dead centre No. 1 cylinder.

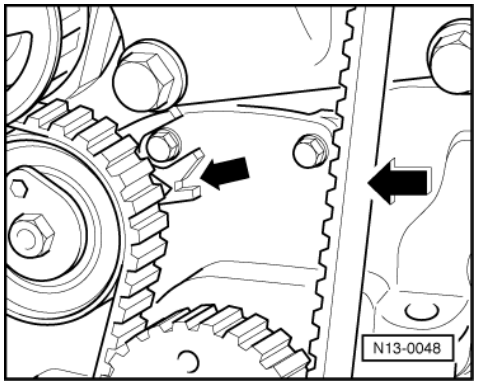

- -> Note the position of the tensioning roller indicator -arrow-. Press the toothed belt with firm thumb pressure. The indicator must move.
- Release tension on toothed belt.
- Turn crankshaft two turns in engine direction of rotation.
- Then check the position of the indicator. It must have returned to its original position.

If tensioning roller does not return to initial position:

- Replace tensioning roller.

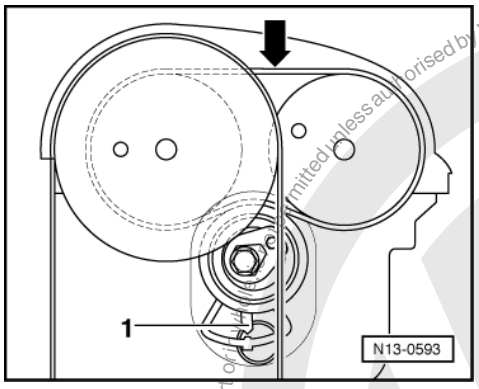

Checking coupling drive tensioning roller:

- -> Note the position of the tensioning roller indicator -1-. Press the toothed belt with firm thumb pressure -arrow-. The indicator must move.
- Release tension on toothed belt.
- Turn crankshaft two turns in engine direction of rotation.

- Then check the position of the indicator. It must have returned to its original position.

If tensioning roller does not return to initial position:

- Replace tensioning roller.

If both tensioning rollers are OK:

- Refit toothed belt guard.
- Refit crankshaft belt pulley. When doing this note the following:
  - The securing bolt and washer for the pulley and toothed belt sprocket must be renewed.
  - When installing the pulley observe the fixing arrangement to toothed belt sprocket.
  - Tightening procedure for the new oiled bolt: 90 Nm + 1/4 turn (90°) further.

Protected by copyright. Copying for private or commercial purposes, in part or in whole, is not permitted unless authorised by Volkswagen AG. Volkswagen AG does not guarantee or accept any liability with respect to the correctness of information in this document. Copyright by Volkswagen AG.
satelettronica

Tightening torques

Note:

The assembly mounting securing bolts are stretch bolts and must be replaced.

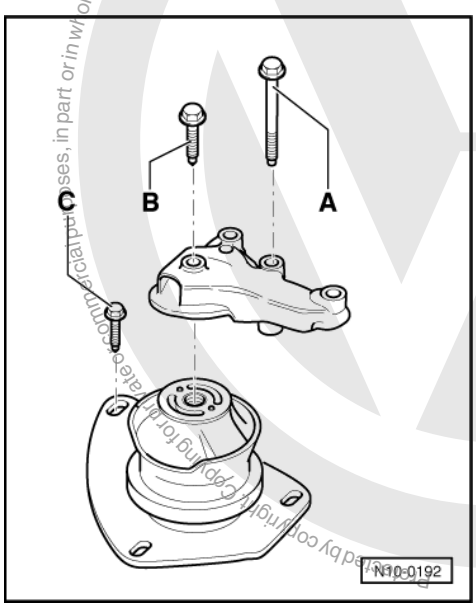

-> Engine mounting

A = 40 Nm + 1/4 turn (90°) further
B = 50 Nm
C = 20 Nm + 1/8 turn (45°) further

- Install ribbed belt again.

Note:

When installing the ribbed belt ensure that it sits correctly in the pulleys.

- Fit console on cylinder head.
- Install engine mounting.
- Install air inlet to air cleaner.
- Install power assisted steering reservoir.
- Install noise insulation tray.

Reproduced by copyright permitted for private, non-commercial purposes, in part or in whole, not permitted unless authorised by Volkswagen AG. Volkswagen AG does not guarantee or accept any liability with respect to the correctness of information in this document. Copyright by Volkswagen AG.
satelettronica

1.4 - Removing, installing and tensioning toothed belts

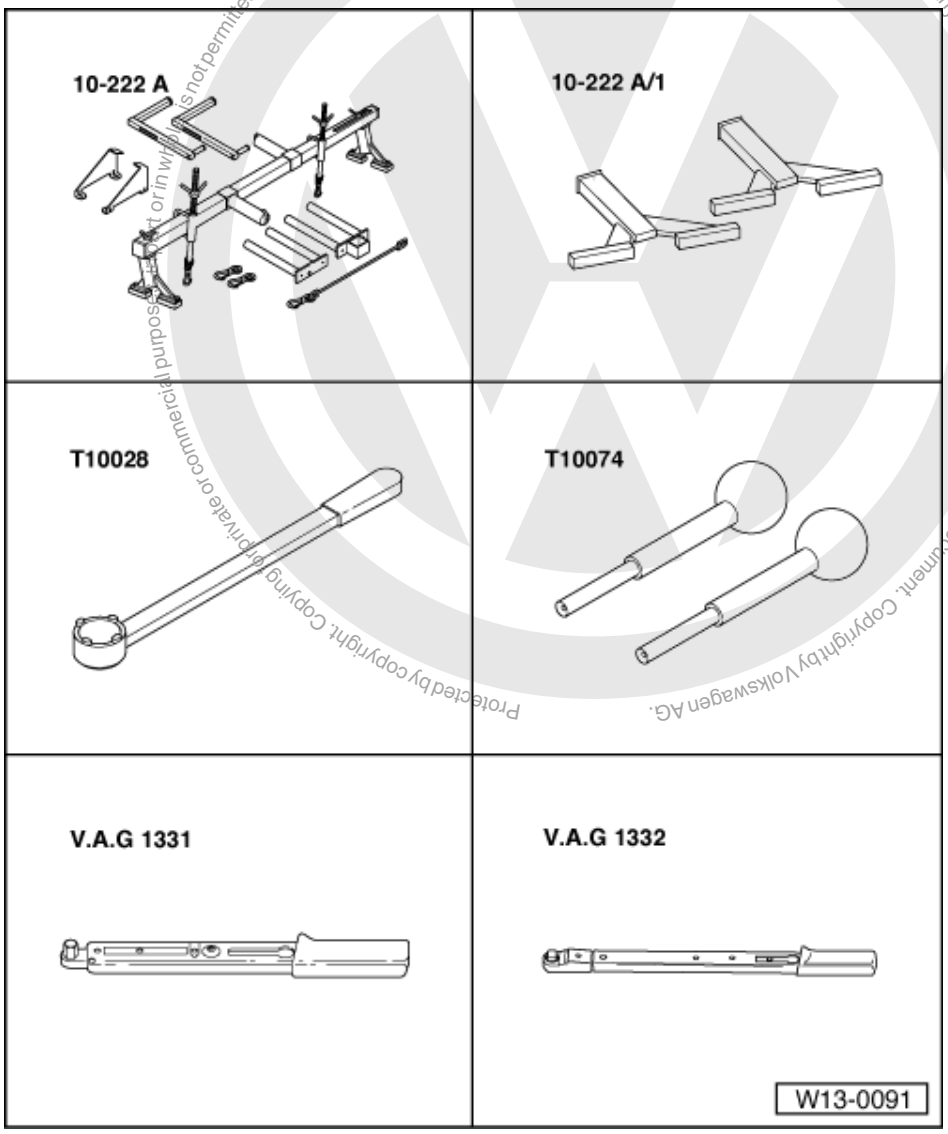

Protected by copyright. Copying for private or commercial purposes, in part or in whole, is not permitted unless authorised by Volkswagen AG. Volkswagen AG does not guarantee or accept any liability with respect to the correctness of information in this document. Copyright by Volkswagen AG.

satelettronica

Special tools, workshop equipment, test and measuring appliances and auxiliary items required

- 10-222A Support bracket
- 10-222A/1 Support for support bracket
- T 10028 Counter-hold tool
- T10074 Locking pins
- V.A.G 1331 Torque wrench (5...50 Nm)
- V.A.G 1332 Torque wrench (40...200 Nm)
- V.A.G 1766 Torx bit set

Removing

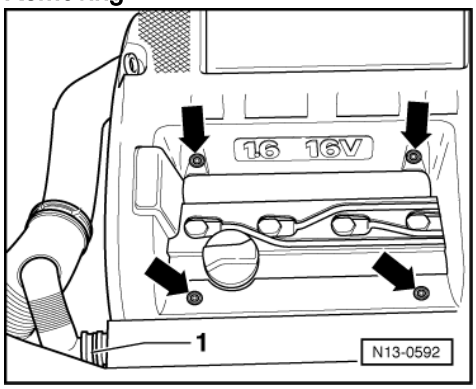

- -> Remove cover above camshaft housing -arrows-.
- Remove air cleaner:

=> Repair group 24; Servicing injection; Dismantling and assembling air cleaner Servicing injection Dismantling and assembling air cleaner
- Remove the toothed belt guard upper part.

The engine must be lowered slightly as follows to enable the crankshaft sprocket to be removed:

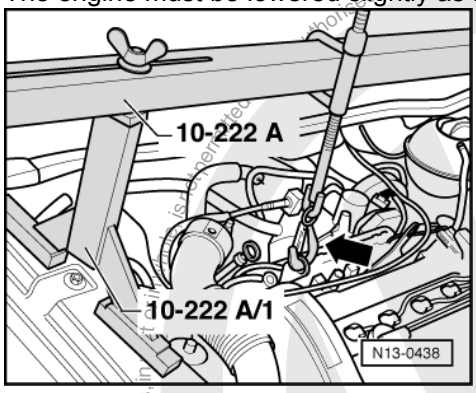

- -> Fit support 10-222A with legs 10-222A/1 as shown.
- Remove power assisted steering reservoir and place to side.
- Remove air inlet to air cleaner.
- Remove upper securing bolt from lower toothed belt guard under console.
- Take-up weight of engine, and remove console as follows:

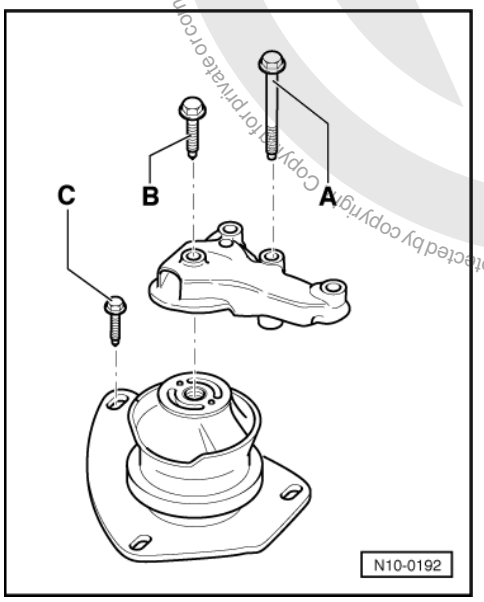

Protected by copyright. Copyright by Volkswagen AG. Volkswagen AG does not guarantee or accept any liability with respect to the correctness of information in this document. Copyright by Volkswagen AG. Copyright for private or commercial purposes, in part or in whole, is not permitted unless authorized by Volkswagen AG.
satelettronica

- -> Remove securing bolts A, B and C
  and remove complete assembly mounting.
- Remove console from cylinder head.
- Remove right insulation tray.
- Lower engine until the pulley securing bolt is accessible.
- Mark the direction of rotation of the ribbed belt and remove belt as follows.

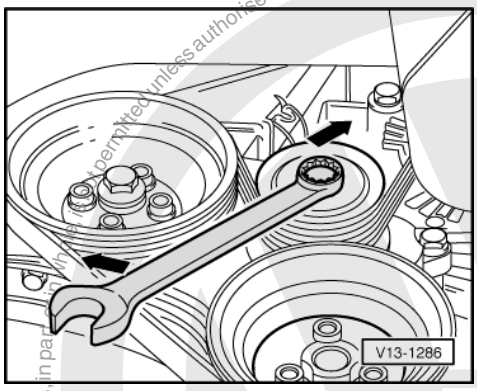

- -> Using a spanner on the securing bolt swivel tensioning roller in direction of arrow.
- Remove ribbed belt.

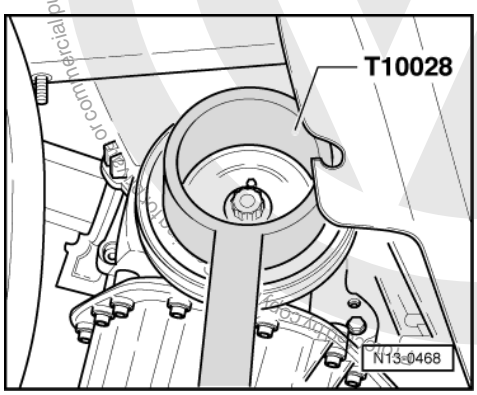

- -> Now loosen the securing bolt for the pulley/toothed belt sprocket. To do this hold the pulley with counter-hold tool T 10028.
- Remove pulley. Refit securing bolt with several washers and tighten to secure toothed belt sprocket.
- Remove ribbed belt tensioning roller on vehicles with air conditioning system.
- Remove lower toothed belt guard.

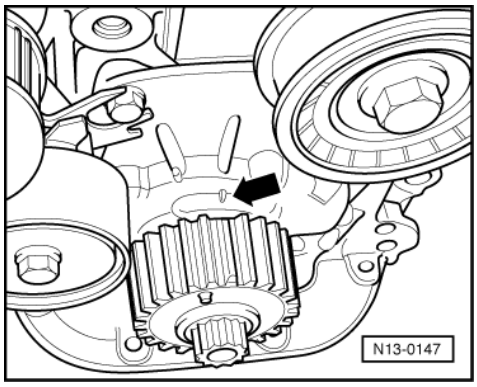

- -> Set the crankshaft to TDC No. 1 cylinder. The tooth with end ground down must align with the mark on the oil pump.

satelettronica

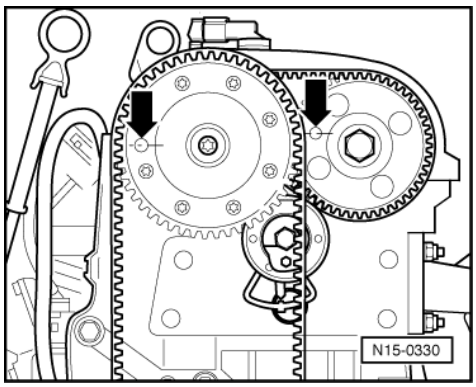

- -> The locking pin holes in the camshaft adjuster and exhaust camshaft sprocket must align with the fitting holes in the camshaft housing -arrows-.

Note:

If the locking pin holes are positioned to the outside on the toothed belt sprockets, the crankshaft must be turned one revolution further.

Lock camshaft adjuster and exhaust camshaft sprocket with camshaft locking pins T10074 as follows:

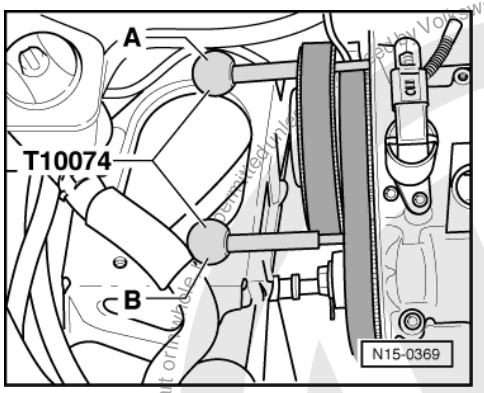

- -> First guide locking pin -A- through the locating hole of the camshaft adjuster and then the locking pin -B- for the exhaust camshaft sprocket onto stop in the camshaft housing fitting holes.
- Mark direction of rotation of both toothed belts.

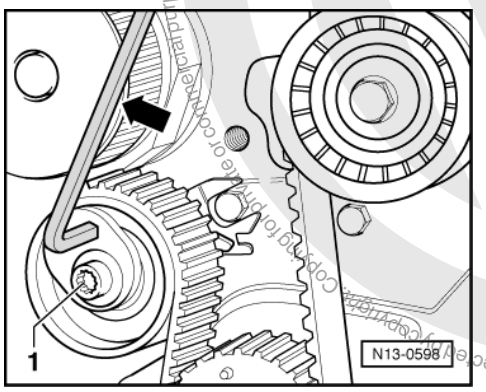

Removing main drive toothed belt:

- -> Loosen main belt drive tensioner using Torx bit from V.A.G 1766 -1- and release tension on toothed belt by turning tensioning roller anti-clockwise -arrow-.
- Loosen clamping bolt on tensioning roller.
- Take off toothed belt.

Protected by copyright. Copying for private or commercial purposes, in part or in whole, is not permitted unless authorised by Volkswagen AG. Volkswagen AG does not guarantee or accept any liability with respect to the correctness of information in this document. Copyright by Volkswagen AG.
satelettronica

Removing coupling drive toothed belt:

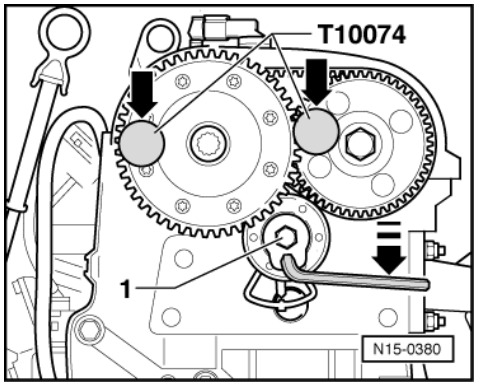

- -> Loosen coupling drive tensioner -1- and slacken toothed belt by turning tensioning roller clockwise.
- Pull locking pins out of camshaft adjuster.
- Remove coupling drive tensioning roller.
- Take off toothed belt.

Installing

Prerequisites

- The pistons must not be positioned at TDC.
- The crankshaft toothed belt sprocket is secured to the crankshaft with the securing bolt and several washers.
- Exhaust camshaft sprocket locked in camshaft housing fitting holes and secured against turning.

Note:

If a piston is at TDC the valves could strike the piston when turning the camshafts.

Work sequence

- Place coupling drive toothed belt loosely on the camshaft sprockets.
- Secure camshaft adjuster with locking pin.
- Fit toothed belt for coupling the camshafts in a clockwise direction starting at top on inlet camshaft sprocket and then onto exhaust camshaft sprocket. The slack section of the toothed belt must be downwards. Note direction of rotation with used belts.

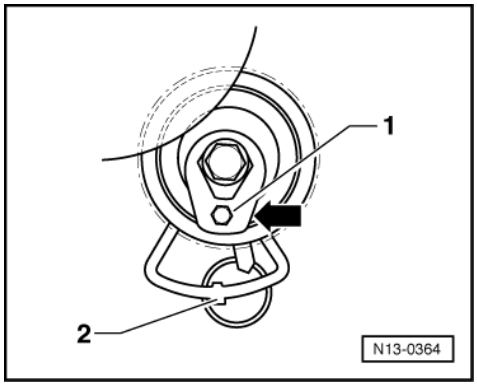

Install coupling drive tensioning roller as follows:

- -> Turn coupling drive tensioning roller clockwise towards marking window -arrow- using a hexagon key -1- (tensioning roller in untensioned position).
- Press lower section of toothed belt for coupling the camshafts upwards with tensioning roller and fit tensioning roller securing bolt.

Protected by copyright. Copying for private or commercial purposes, in part or in whole, is not permitted unless authorised by Volkswagen AG. Volkswagen AG does not guarantee or accept any liability with respect to the correctness of information in this document. Copyright by Volkswagen AG.
satelettronica

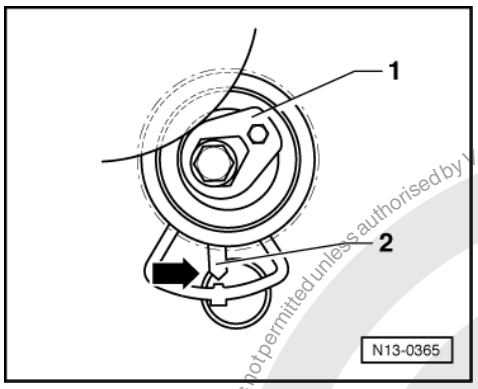

- Tighten securing bolt hand tight. The lug in the base plate must engage in the hole in the cylinder head -2-.
- -> Then tension toothed belt by turning tensioning roller anti-clockwise, with a hexagon key item -1-, until the indicator -2- aligns over the lug in the base plate in the marking window -arrow-.
- Tighten clamping nut on tensioning roller.
  Tightening torque: 20 Nm

Note:

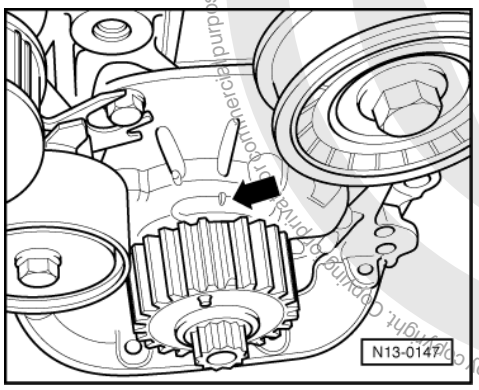

The camshaft must remain secured against turning by the locking pins T10074 until the main drive toothed belt is fitted.

- -> Set the crankshaft to TDC No. 1 cylinder. The tooth with end ground down must align with the mark on the oil pump.

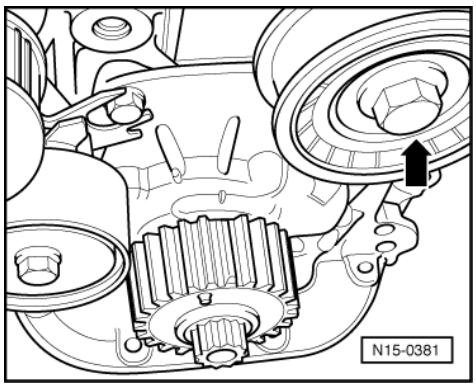

- -> Remove the main drive toothed belt idler roller -arrow-.

Protected by copyright. Copying for private or commercial purposes, in part or in whole, is not permitted unless authorised by Volkswagen AG. Volkswagen AG does not guarantee or accept any liability with respect to the correctness of information in this document. Copyright by Volkswagen AG.
satelettronica

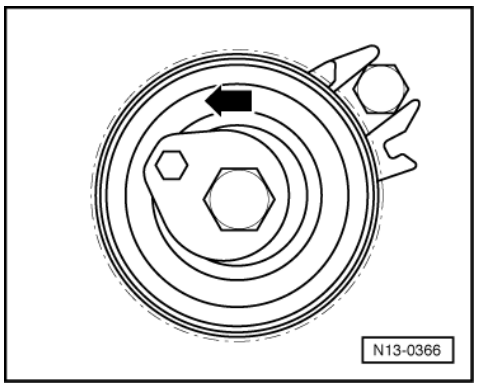

If main drive tensioning roller was removed beforehand, install tensioning roller as follows:

- -> Using Allen key turn main drive tensioning roller anti-clockwise to position shown -arrow-.

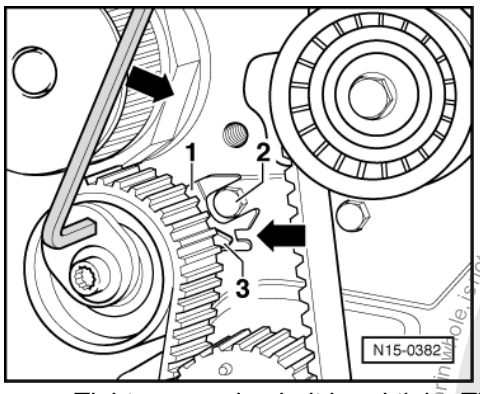

- -> Tighten securing bolt hand tight. The base plate -1- cut-out must engage over securing bolt -2-.
- Fit main drive toothed belt on in anti-clockwise direction starting at water pump then via tensioning roller, crankshaft and exhaust camshaft sprocket. Note direction of rotation with used belts.
- Refit the main belt drive idler roller and tighten it to 50 Nm.

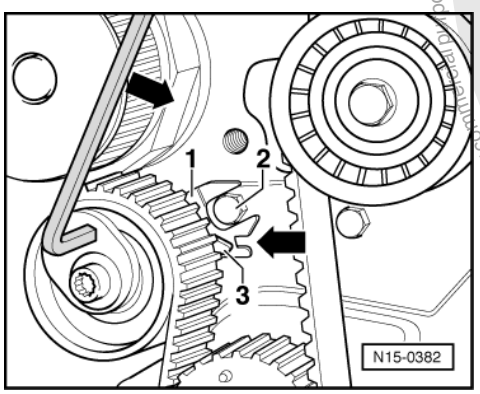

- -> Then tension toothed belt by turning the tensioning roller in direction of arrow until the indicator -3- aligns with the notch in the base plate -arrow-.
- Tighten tensioning roller using Torx bit from V.A.G 1766.
  Tightening torque: 20 Nm
- Remove tool from camshaft sprockets.
- Now turn the crankshaft two turns in engine direction of rotation until it is again at top dead centre No. 1 cylinder.
- Now the position of the toothed belts and tensioning roller must be checked again.
- Tension toothed belt again if necessary.
- Refit toothed belt guard.
- Refit crankshaft belt pulley. When doing this note the following:
  - The securing bolt and washer for the pulley/toothed belt sprocket must be renewed.
  - When installing the pulley observe the fixing arrangement to toothed belt sprocket.

Protected by copyright. Copying for private or commercial purposes, in whole or in part, is not permitted unless authorised by Volkswagen AG. Volkswagen AG does not guarantee or accept any liability with respect to the correctness of information in this document. Copyright by Volkswagen AG.
satelettronica

- Tightening procedure for the new oiled bolt: 90 Nm + 1/4 turn (90°) further.

Tightening torques

Note:

The assembly mounting securing bolts are stretch bolts and must be replaced.

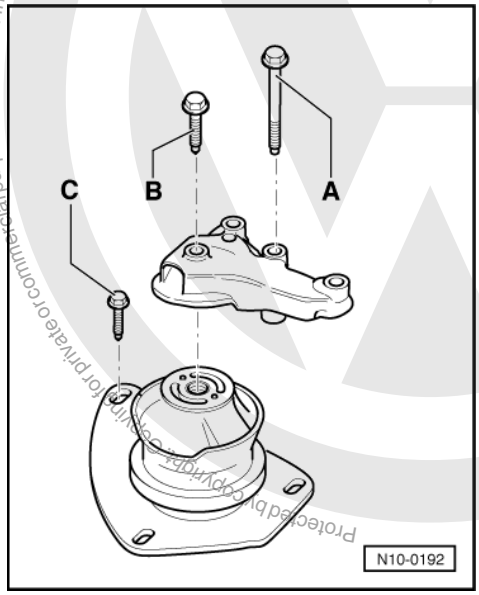

-> Engine mounting

A = 40 Nm + 1/4 turn (90°) further
B = 50 Nm
C = 20 Nm + 1/8 turn (45°) further

- Install ribbed belt again.

Note:

When installing the ribbed belt ensure that it sits correctly in the pulleys.

- Fit console on cylinder head.
- Install engine mounting.
- Install air inlet to air cleaner.
- Install power assisted steering reservoir.

1.5 - Removing and installing camshaft housing

Special tools, workshop equipment, testers, measuring instruments and auxiliary items required

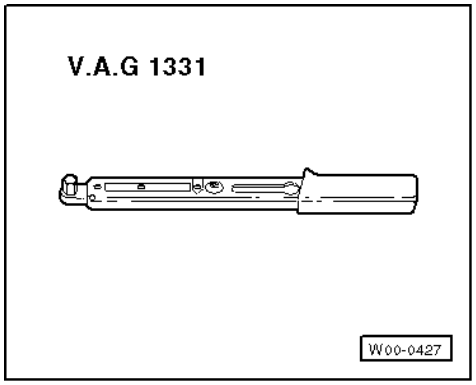

Protected by copyright. Copying for private or commercial purposes, in part or in whole, is not permitted unless authorised by Volkswagen AG. Volkswagen AG does not guarantee or accept any liability with respect to the correctness of information in this document. Copyright by Volkswagen AG.
satelettronica

- V.A.G 1331 Torque wrench (5...50 Nm)
- Two studs (M 6 x 70)
- D 188 003 A1 Sealant

Removing

Notes:

- The camshafts are mounted in the camshaft housing on this engine. Therefore, the main drive toothed belt must be removed before the camshaft housing can be removed.
- The camshaft housing sealing surface must not be reworked.
- Removing and installing camshaft =>Page 74 , Servicing valve gear.

Work sequence

- First check whether a coded radio is fitted. If this is the case obtain the anti-theft coding.
- With the ignition switched off disconnect the battery earth strap.
- First remove main drive toothed belt
  => Page 58 .
- Remove spark plug connectors with H.T. cables.
- Pull 4 pin connector off ignition transformer.
- Pull connectors off Hall sender, oil temperature sender and camshaft adjustment valve.

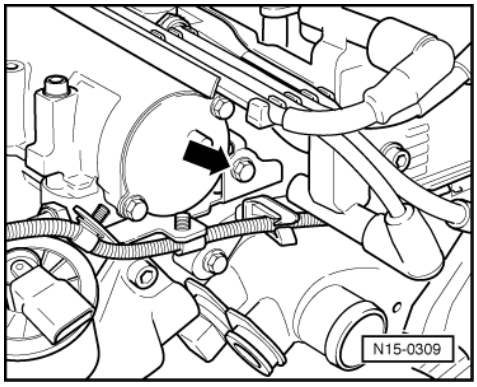

- -> Remove securing bolt -arrow- from cable retainer.
- Remove toothed belt guard rear securing bolt (in area of right-hand lifting eye).
- Loosen camshaft housing bolts (from outside to inside and in cross-over sequence) and remove.
- Carefully lift camshaft housing off.

Installing

Prerequisites

- The pistons must not be positioned at TDC.
- Camshaft sprockets locked into camshaft housing fitting holes and secured against turning.

- Remove sealant remnants on cylinder head and camshaft housing with a commercially available sealant remover.
- Prevent dirt and sealant remnants from entering cylinder head.

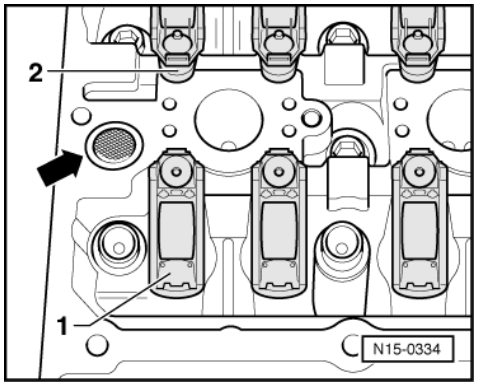

Protected by copyright. Copyright for private or commercial purposes, in part or in whole is not permitted unless authorised by Volkswagen AG. Volkswagen AG does not guarantee or accept any liability with respect to the correctness of information in this document. Copyright by Volkswagen AG.
satelettronica

- -> Clean the oil strainer in cylinder head -arrow-.

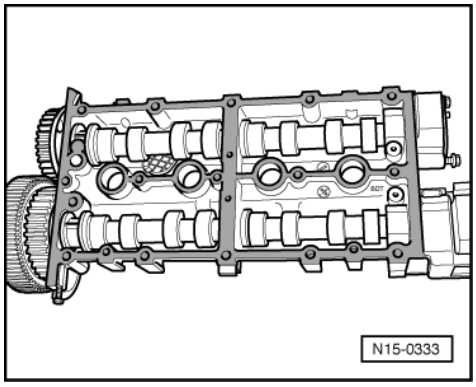

- Clean sealing surface, must be free of oil and grease.
- -> Apply a thin even coat of sealant onto the clean camshaft housing sealing surface. See hatched area on illustration.

Note:

The sealant must not be applied too thick otherwise excess sealant can enter the oil channels and cause damage to the engine.

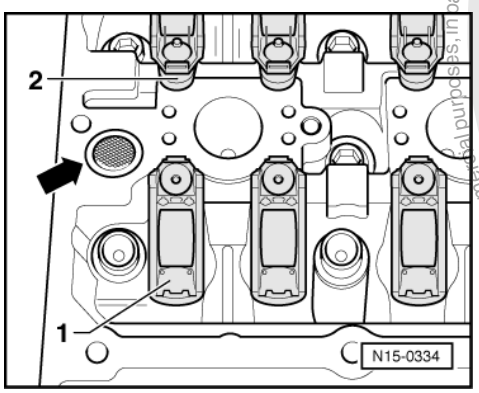

- -> Ensure all roller rocker fingers contact the valve ends -1- correctly and they are clipped into their respective support elements -2-.
- Check whether the oil strainer is fitted -arrow-.
- Screw two studs (M6 x 70) into cylinder head before installing camshaft housing.

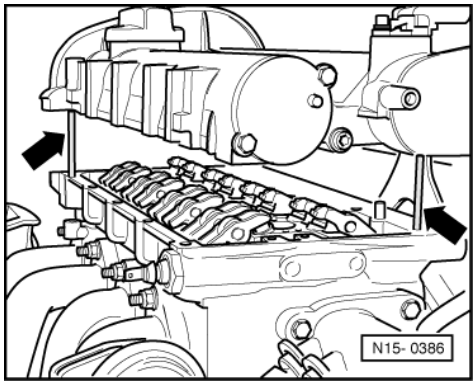

- -> Carefully fit the camshaft housing vertically onto the cylinder head studs and dowel pins -arrows- from above.
- Tighten camshaft housing new securing bolts (evenly from inside to outside using cross-over sequence).

Ensure that camshaft housing is not canted.
Tightening torque: 10 Nm + 1/4 turn (90 °) further.

Protected by copyright. Copying for private or commercial purposes, in part or in whole, is not permitted unless authorised by Volkswagen AG. Volkswagen AG does not guarantee or accept any liability with respect to the correctness of information in this document. Copyright by Volkswagen AG.
satelettronica

Notes:

- Sealant must be left dry for approx. 30 minutes after installing camshaft housing.

The rest of the assembly is basically a reverse of the dismantling sequence.

1.6 - Removing and installing cylinder head

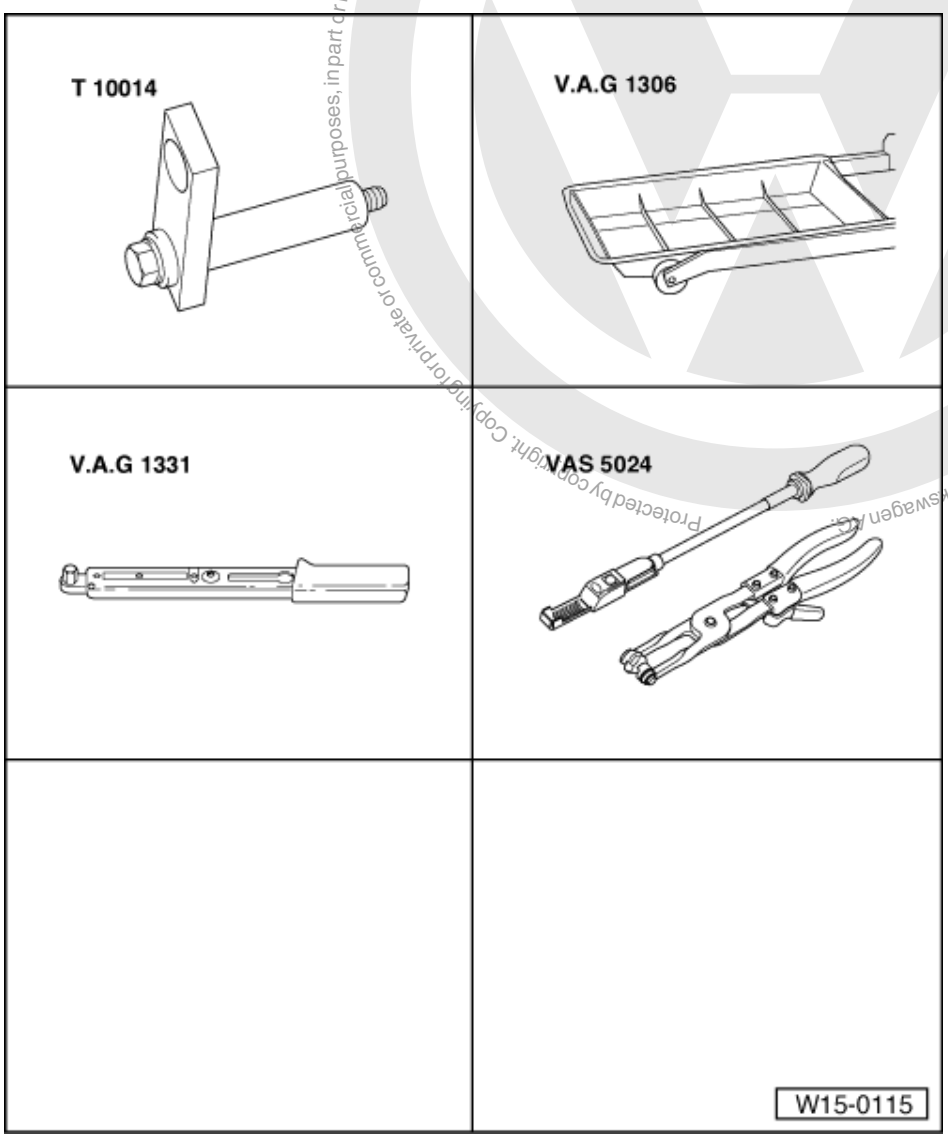

Special tools, workshop equipment, test and measuring appliances and auxiliary items required

- T 10014 Retainer
- V.A.G 1306 Drip tray
- V.A.G 1331 Torque wrench (5...50 Nm)
- VAS 5024 Assembly tool for spring-type clamps
- D 188 003 A1 Sealant

Prerequisites

- The engine must be no more than warm to touch.
- The pistons must not be positioned at TDC.

Protected by copyright. Copying for private or commercial purposes, in part or in whole, is not permitted unless authorised by Volkswagen AG. Volkswagen AG does not guarantee or accept any liability with respect to the correctness of information in this document. Copyright by Volkswagen AG.
satelettronica

Removing

- First check whether a coded radio is fitted. If this is the case obtain the anti-theft coding.
- With the ignition switched off disconnect battery earth strap.
- First remove main drive toothed belt
  => Page 58 .
- Remove camshaft housing
  => Page 65 .
- Remove roller rocker finger together with support elements and place on a clean surface.
- Ensure the roller rocker fingers and the support elements are not interchanged.
- Open and close the expansion tank sealing cap to release pressure in cooling system.
- Drain coolant => Page 129 .

- Pull the clamps which secure the coolant pipe to coolant pump off the thermostat housing.
- Remove thermostat housing from cylinder head.
- Disconnect all other inter-connecting, coolant, vacuum and intake hoses from cylinder head.
- Remove oil dipstick tube.

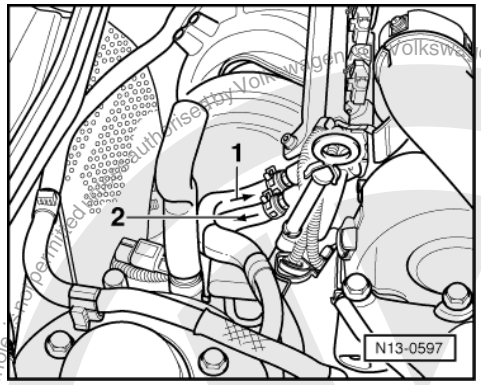

- -> Disconnect fuel supply and fuel return pipes at fuel rail, items -1- and -2-.

> Warning!
> Fuel supply lines are under pressure! Before removing from hose connection wrap a cloth around the connection. Then release pressure by carefully pulling hose off connection.

- Loosen or separate the following components:
  - The 2 pin connector from knock sensor (rear of cylinder block) and the 4 pin connector from intake manifold pressure sender (front right under intake manifold).
  - The connector from engine speed sender below oil dipstick tube bracket, and pull connector out from retainer
  - The connector from coolant temperature sender, oil pressure switch and crankcase breather heating
  - The collective connectors below thermostat housing
  - Injector connectors
- Remove front exhaust pipe from exhaust manifold.
- Remove toothed belt guard rear securing bolt (in area of right-hand lifting eye).

Protected by copyright. Copying for private or commercial purposes, in part or in whole, is not permitted unless authorised by Volkswagen AG. Volkswagen AG does not guarantee or accept any liability with respect to the correctness of information in this document. Copyright by Volkswagen AG.
satelettronica

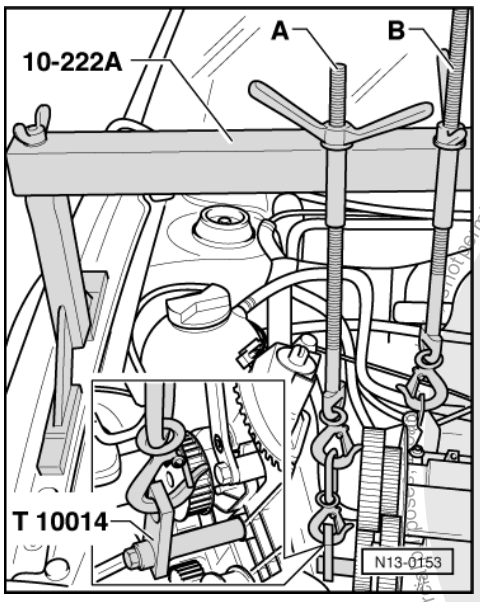

- -> Now the engine must be lifted again slightly with spindle -B-.

Note:

Both lifting eyes are located on the cylinder head, therefore an additional bracket must be secured to the cylinder block to support the engine.

- Attach bracket T 10014 to cylinder block using threaded hole in vicinity of coolant pump -as illustrated-.
- Lift engine slightly using second spindle -A- until spindle -B- is relieved.
- Remove spindle -B-.

Removing cylinder head

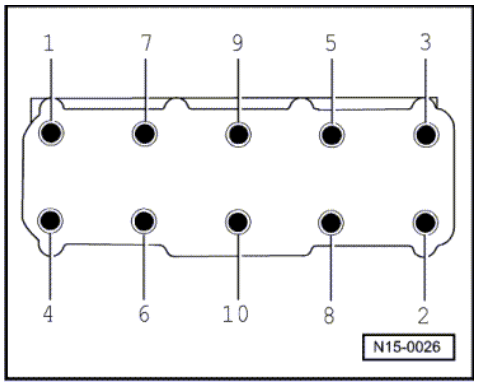

- -> Loosen socket head bolts in the sequence given and then remove completely.
- Carefully lift cylinder head off.

Installing

Notes:

- Only remove the new cylinder head gasket from its packing immediately before installing.
- Handle the new gasket with extreme care. Damaging will lead to leaks.

- Place a clean cloth in cylinders so that no dirt or emery cloth particles can get in between cylinder wall and piston.
- Carefully clean cylinder head and cylinder block sealing surfaces. Thereby ensuring that no scoring or scratches are formed (when using abrasive paper the grade must not be less than 100).
- Carefully remove metal particles, emery remains and cloths.

Protected by copyright. Copying for private or commercial purposes, in part or in whole, is not permitted unless authorised by Volkswagen AG. Volkswagen AG does not guarantee or accept any liability with respect to the correctness of information in this document. Copyright by Volkswagen AG.
satelettronica

Installing cylinder head

- Set No. 1 cylinder piston to top dead centre and then turn crankshaft back slightly.
- Fit new cylinder head gasket. Lettering (Part No.) must be readable.

- Place cylinder head on. When doing this observe the centralizing pins in cylinder block.
- Fit new cylinder head bolts and tighten hand tight.

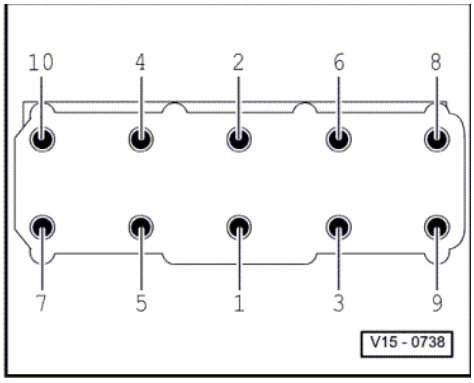

- -> Tighten cylinder head in tightening sequence as follows:
- Tighten all bolts to 30 Nm.
- Then tighten all bolts a 1/4 turn (90 °) further using a rigid wrench.
- Then tighten all bolts again a 1/4 turn (90 °) further.
- Insert support element in cylinder head and fit roller rocker finger onto respective valve stem end and support element.
- Install camshaft housing,
  => Page 65 .

The rest of the assembly is basically a reverse of the dismantling sequence.

- Filling with coolant => Page 129

- Erase the learnt values and adapt the engine control unit again:

=> Repair group 24; Engine control unit; Erasing learnt values and adapting engine control unit to throttle valve control part Engine control unit Erasing learnt values and adapting engine control unit to throttle valve control part

- Install air cleaner:

=> Repair group 24; Servicing injection system; Dismantling and assembling air cleaner. Servicing injection system Dismantling and assembling air cleaner.

Protected by copyright. Copying for private or commercial purposes, in part or in whole, is not permitted unless authorised by Volkswagen AG. Volkswagen AG does not guarantee or accept any liability with respect to the correctness of information in this document. Copyright by Volkswagen AG.
satelettronica

1.7 - Checking compression pressures

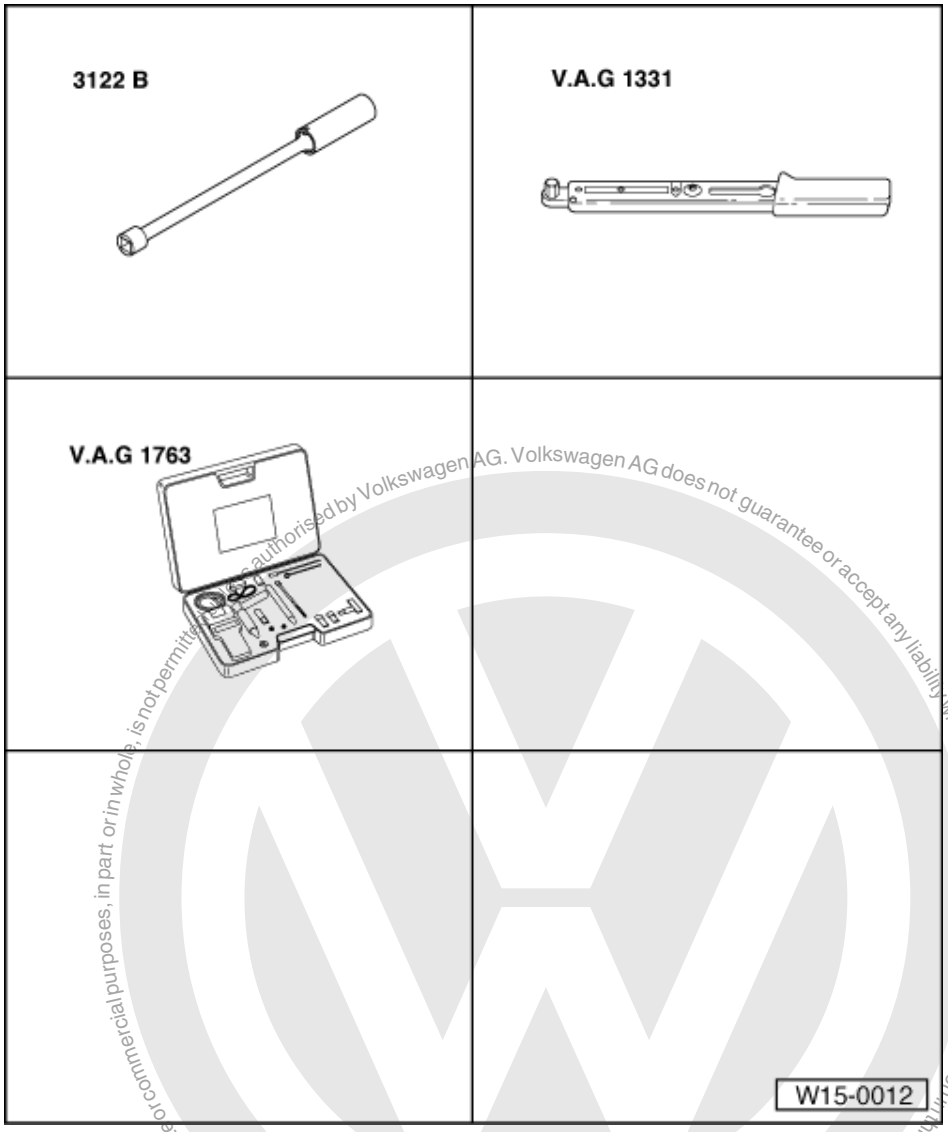

Protected by copyright. Copying for private or commercial purposes, in part or in whole, is not permitted unless authorised by Volkswagen AG. Volkswagen AG does not guarantee or accept any liability with respect to the correctness of information in this document. Copyright by Volkswagen AG.

satelettronica

Special tools, workshop equipment, test and measuring appliances and auxiliary items required

- 3122 B Spark plug spanner
- V.A.G 1331 Torque wrench (5...50 Nm)
- V.A.G 1763 Compression tester

Test conditions

- Engine oil temperature must be at least 30 °C.

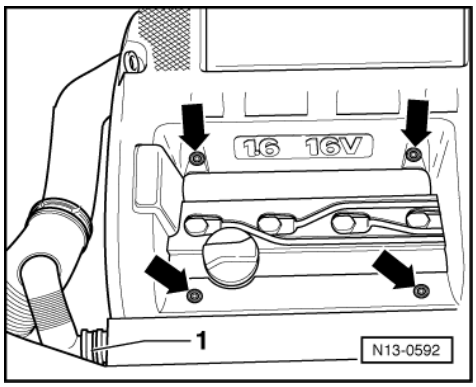

Work sequence

- Remove air cleaner:

=> Repair group 24; Servicing injection; Dismantling and assembling air cleaner Servicing injection Dismantling and assembling air cleaner

- -> Remove cover above camshaft housing -arrows-.
- Take off H.T. wiring with spark plug connectors first.
- Unscrew spark plugs with spark plug spanner 3122B.

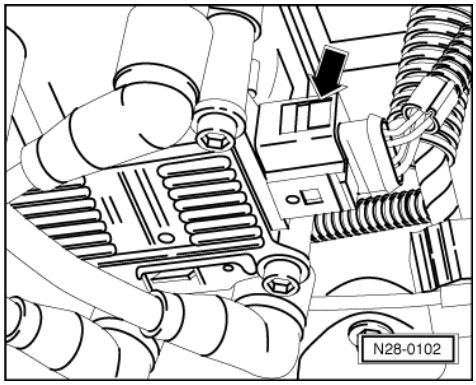

- -> Pull 4 pin connector off ignition transformer -arrow-.
- Remove fuse 40 for fuel pump.
- Check compressions with compression tester V.A.G 1381 or V.A.G 1763.

Note:

See relevant test unit operating instructions for instructions on how to use test unit.

- Operate starter until tester shows no further pressure increase.

Compression pressure:

New: 10...15 bar
Wear limit: 7 bar

Permissible difference between all cylinders: 3 bar

- Insert spark plugs with spark plug spanner 3122B and tighten to 30 Nm.

The rest of the assembly is basically a reverse of the dismantling sequence.

- Interrogate fault memory:

Protected by copyright. Copying for private or commercial purposes, in part or in whole, is not permitted unless authorised by Volkswagen AG. Volkswagen AG does not guarantee or accept any liability with respect to the correctness of information in this document. Copyright by Volkswagen AG.
satelettronica

=> Repair group 01; Fault memory; Interrogating and erasing fault memory Fault memory Interrogating and erasing fault memory

2 - Servicing valve gear

2.1 - Servicing valve gear

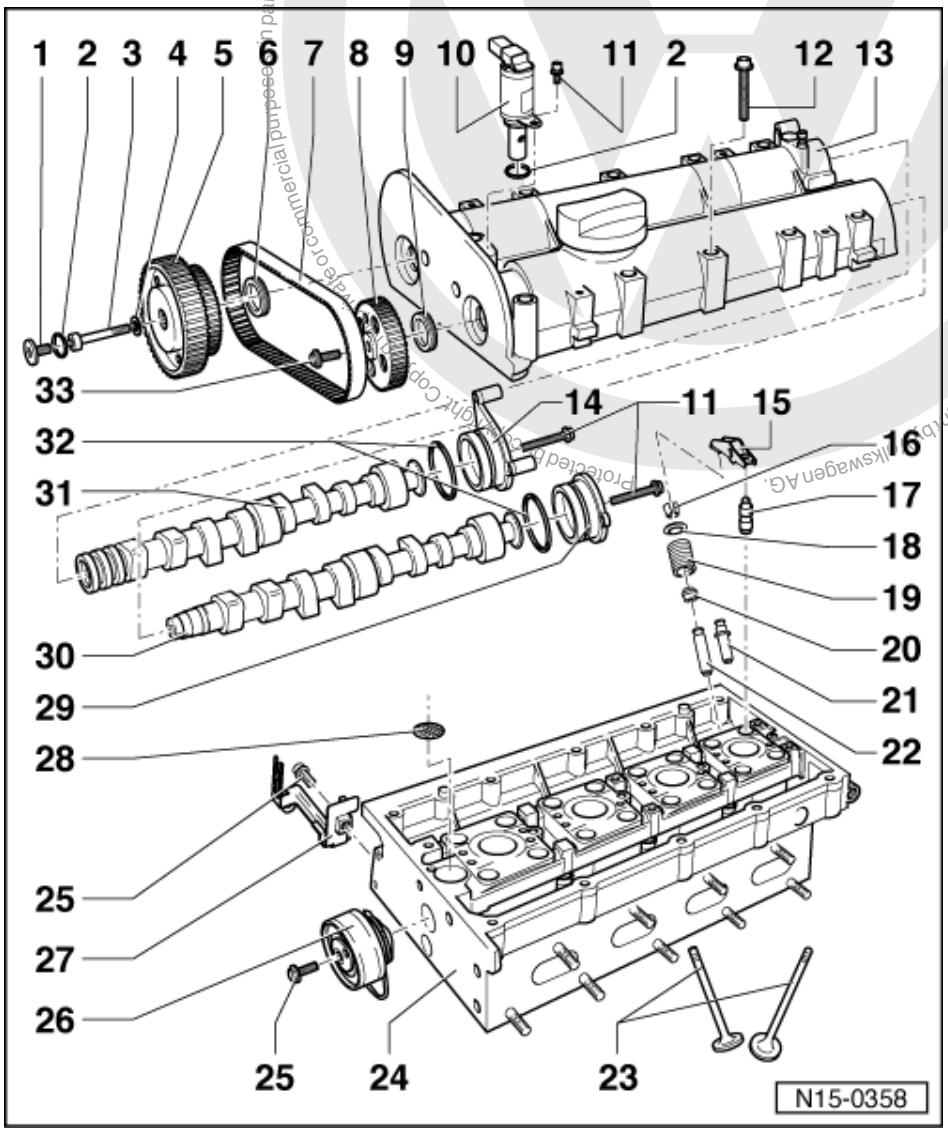

1 Plug, 25Nm
2 O-ring
- Renew if damaged

3 Central bolt for camshaft adjuster 40 Nm + 1/4 turn. (90 °) further
- Left-hand thread
- Removing and installing, =>Page 89
- Oil threads and bolt head contact surface before fitting

4 Washer
- Renew

5 Camshaft adjuster
- Must not be taken apart
- Removing and installing, =>Page 89

satelettronica

- Check camshaft adjustment => Page 85

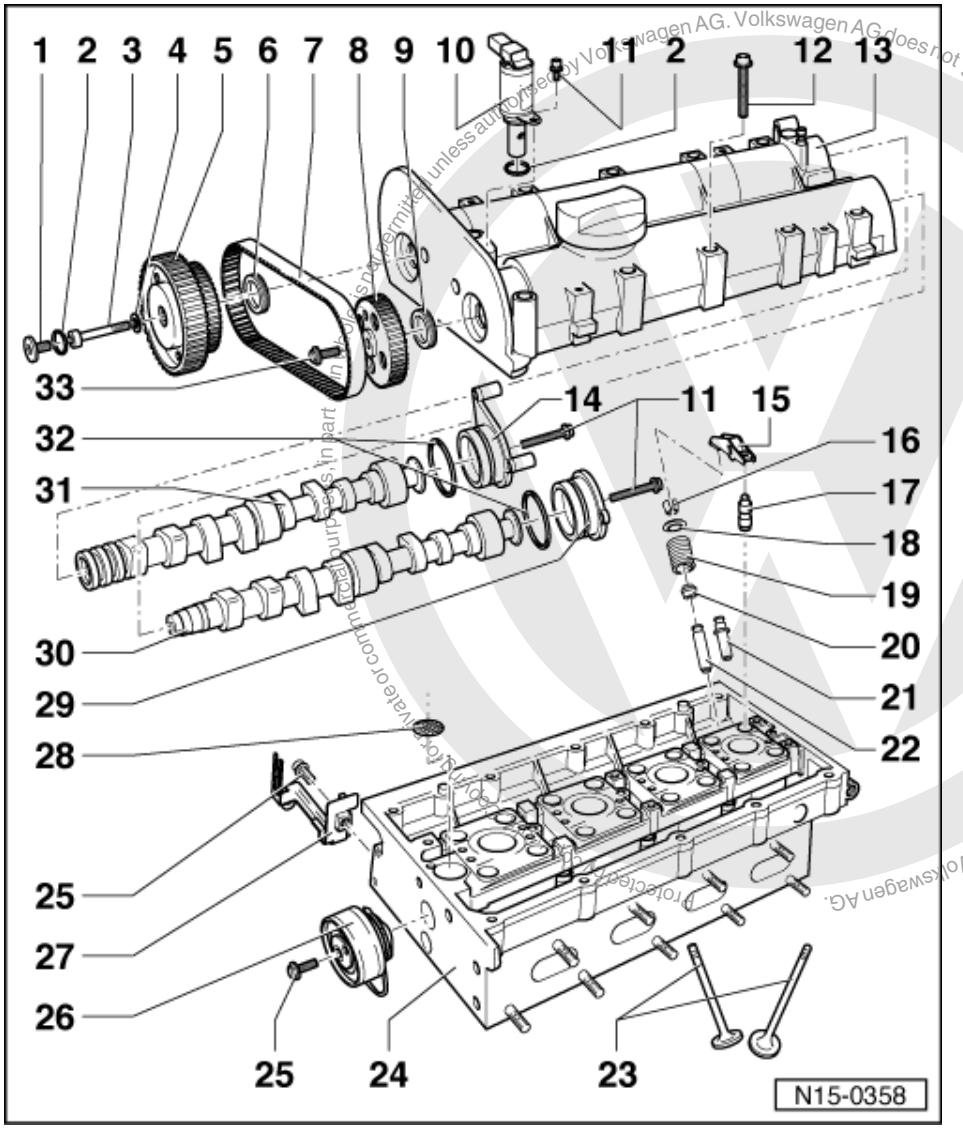

6 Inlet camshaft oil seal
- Only replace with camshaft installed
- Lightly oil sealing lip of oil seal
- Renewing=> Page 97

7 Coupling drive toothed belt
- Mark D.O.R. before removing
- Check for wear
- Do not kink
- Removing and installing => Page 58

8 Exhaust camshaft sprocket
- When installing note fixing arrangement
- Removing and installing, =>Page 89

Copyright by Volkswagen AG. Volkswagen AG does not guarantee or accept any liability with respect to the correctness of information in this document. Copyright by Volkswagen AG. Protected by copyright. Copying for private or commercial purposes, in part or in whole, is not permitted unless authorized by Volkswagen AG.
satelettronica

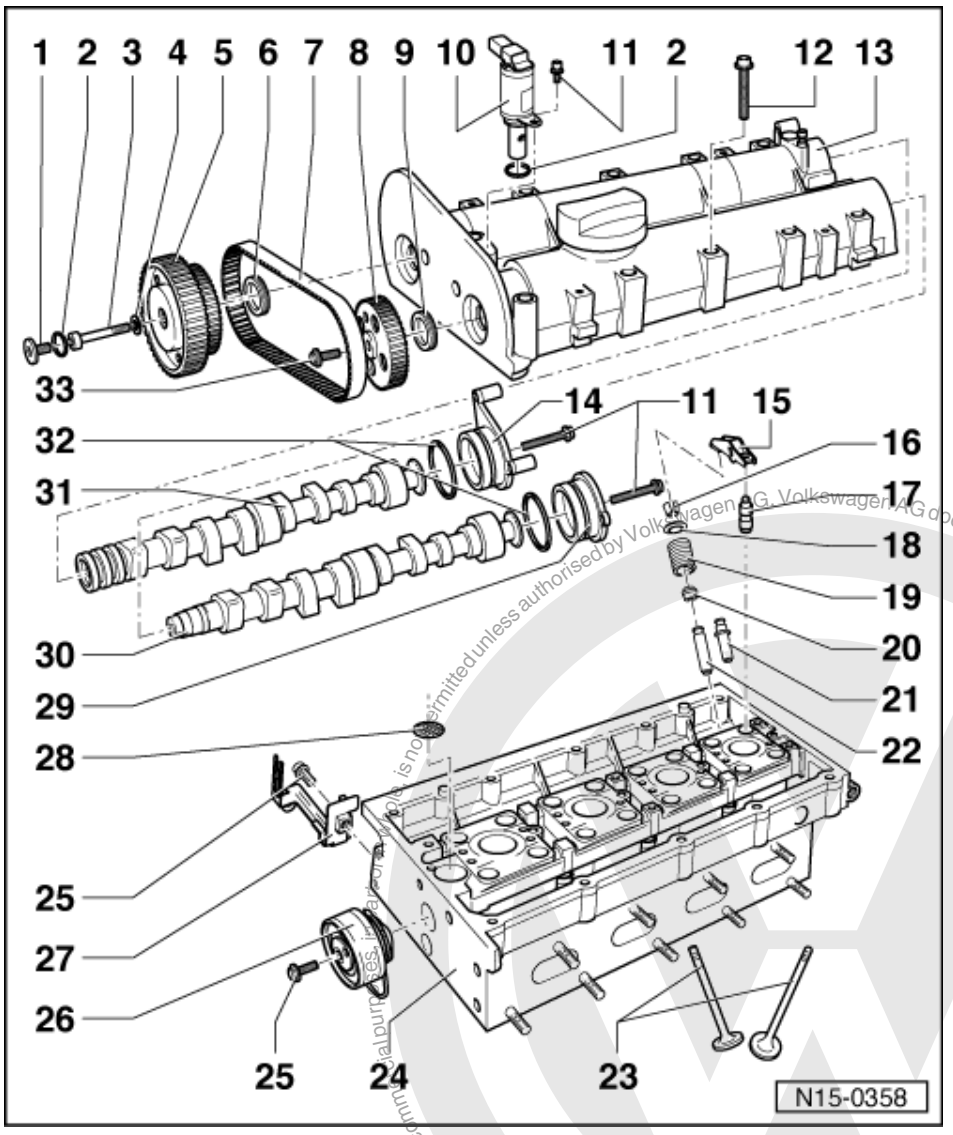

9 Exhaust camshaft oil seal
- Only replace with camshaft installed
- Lightly oil sealing lip of oil seal
- Renewing=> Page 97

10 Camshaft adjustment valve (N205)
- Checking => Page 85

11 10 Nm

12 10 Nm + 1/4 turn (90 °) further
- Renew
- Tighten from centre outwards

13 Camshaft housing
- Removing and installing
  => Page 65
- Remove sealant remnants
- Coat with AMV 188 003 before fitting
- When installing fit vertically from above onto studs and dowel pins

Protected by copyright. Copying for private or commercial purposes, in part or in whole, is not permitted unless authorised by Volkswagen AG. Volkswagen AG does not guarantee or accept any liability with respect to the correctness of information in this document. Copyright by Volkswagen AG.
satelettronica

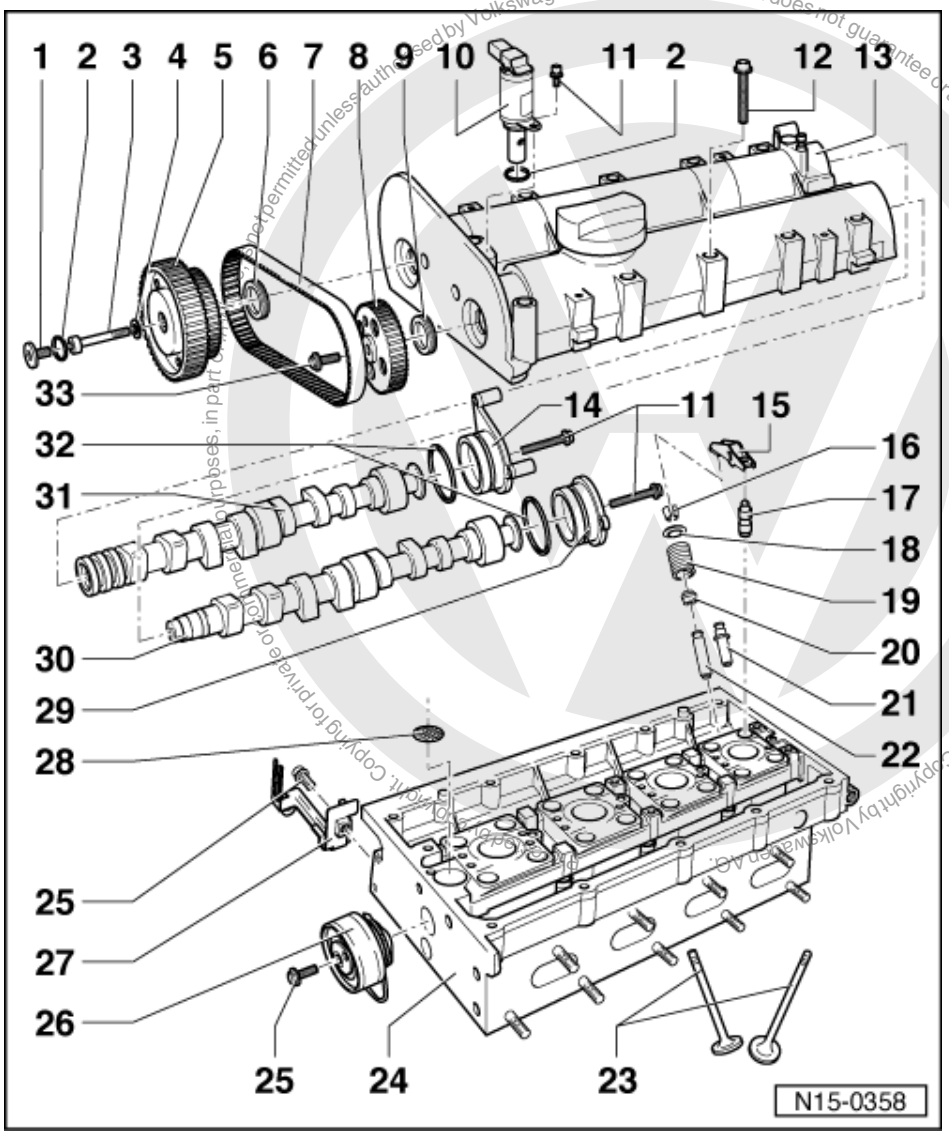

14 Sealing cap/ignition transformer retainer

15 Roller rocker finger

- Check roller bearing
- Oil contact surface
- Use securing clip to clip onto support element when installing

16 Cotters

17 Support element

- Do not interchange
- With hydraulic valve clearance compensation
- Before installing check camshaft axial clearance => Page 82 , Fig. 2
- Oil contact surface

18 Upper valve spring plate

satelettronica

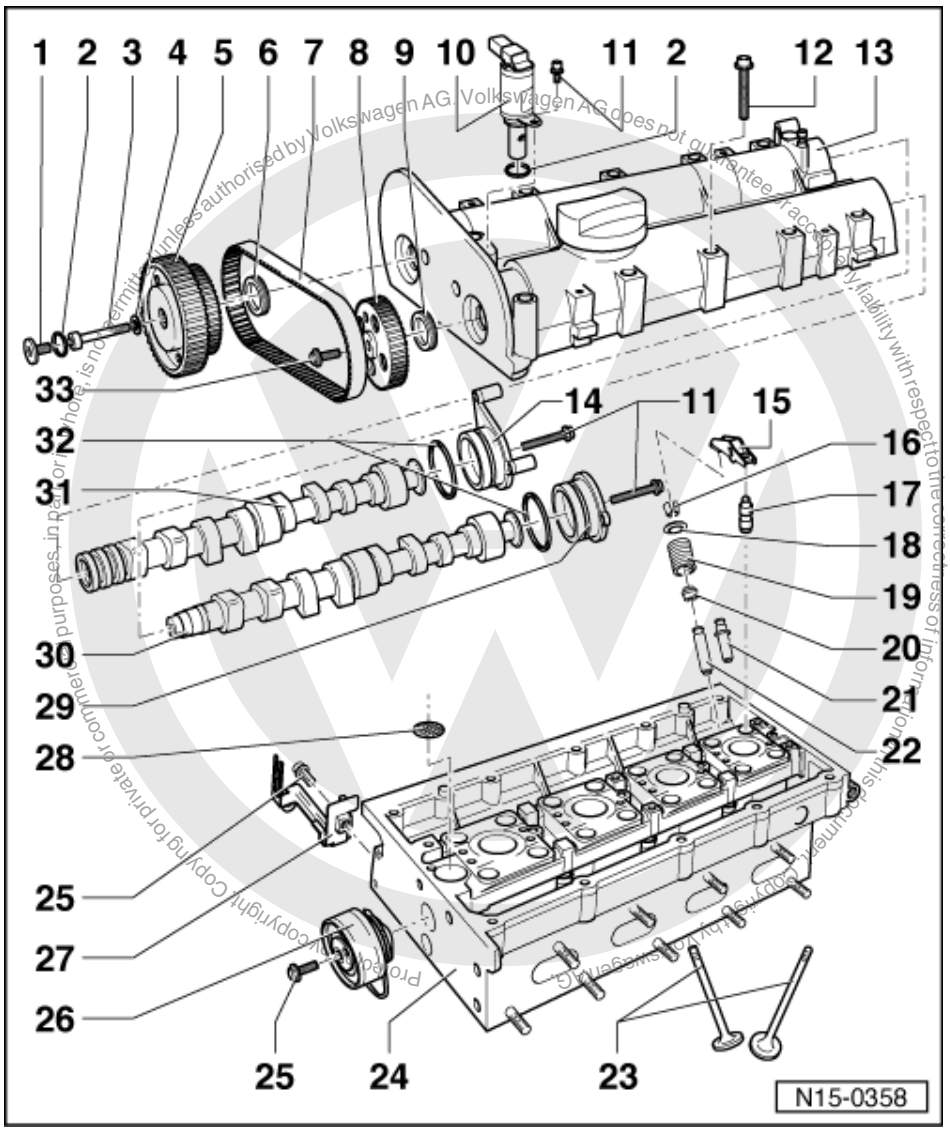

19 Valve spring

- Removing and installing:
  Cylinder head
  removed: with 3362
  installed: => Page 102 , Renewing valve stem seals

20 Valve stem seal

- Renewing=> Page 102

21 Service part - valve guide

- With collar

22 Valve guide

- Checking => Page 100
- Renewing => Page 100

23 Valves

- Do not rework only grinding-in is permitted
- Valve dimensions => Fig. 4

satelettronica

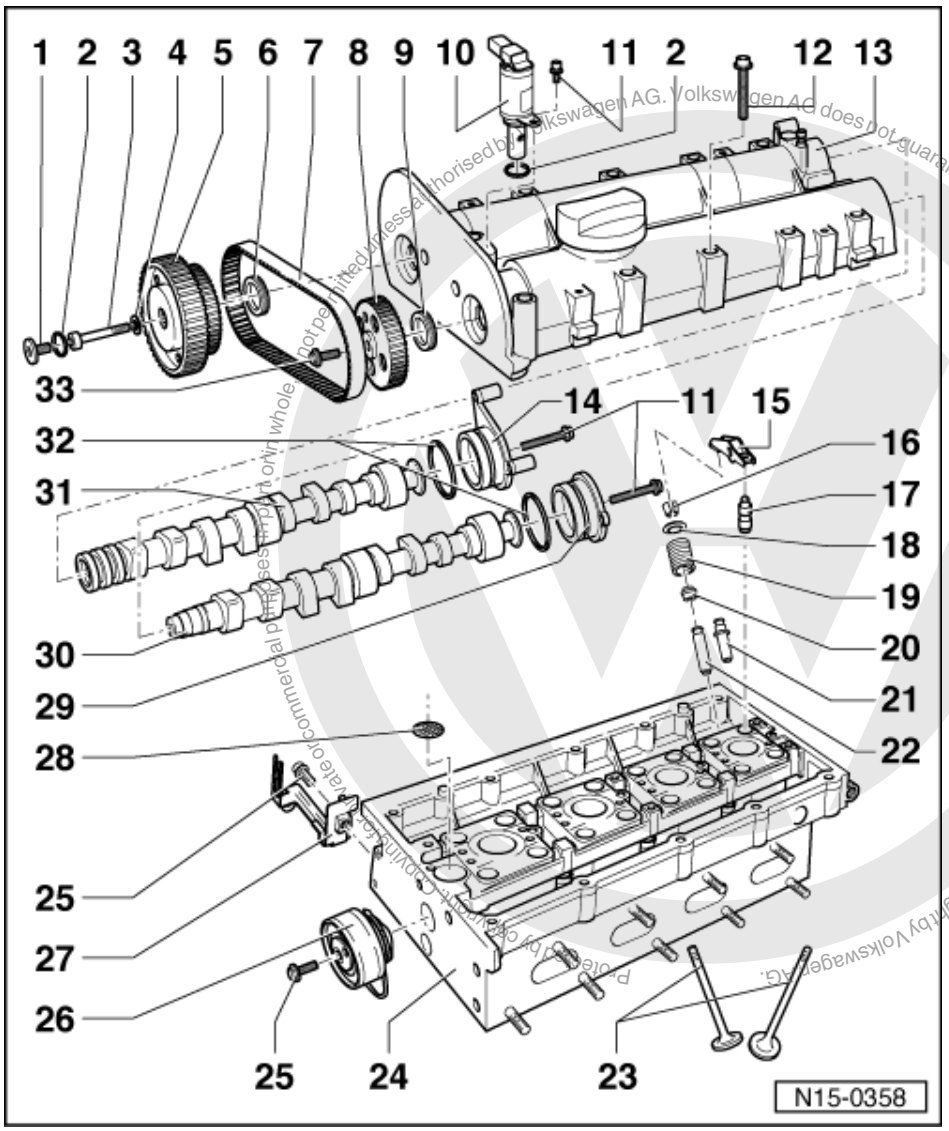

24 Cylinder head

- Reworking valve seats
  => Page 83
- Reworking sealing surface
  => Fig. 1

25 20 Nm

26 Coupling drive tensioning roller

- Checking => Page 53
- Tensioning toothed belts
  => Page 58

27 Retainer

28 Oil strainer

- Clean if soiled
- Note installation position

29 Cap

satelettronica

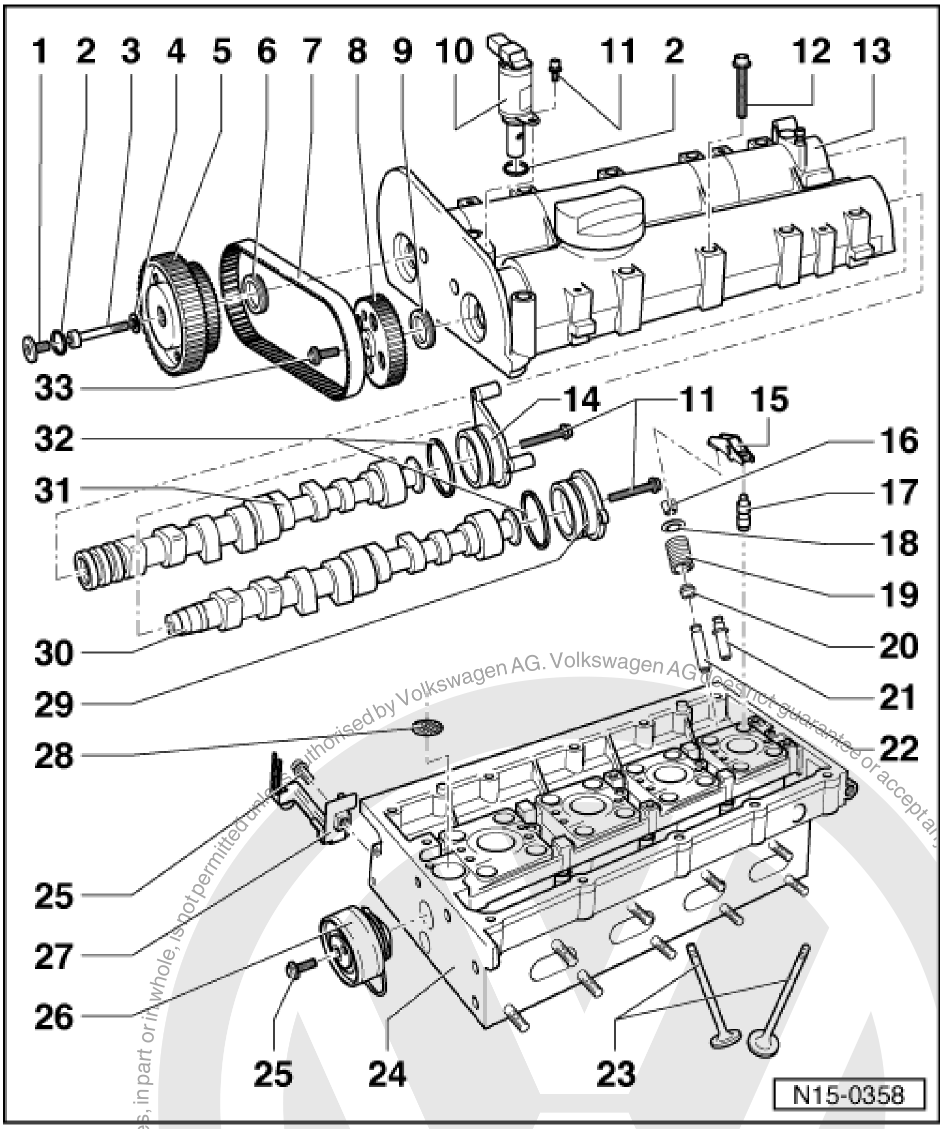

30 Exhaust camshaft

- Checking axial clearance => Fig. 2
- Coat with oil before inserting (also axle bearing shoulder)
- Identification and valve timing => Page 82 , Fig. 3
- After installing, replace oil seal
- Renewing seals=> Page 97

31 Inlet camshaft

- Checking axial clearance => Fig. 2
- Coat with oil before inserting (also axle bearing shoulder)
- Identification and valve timing => Page 82 , Fig. 3
- After installing, replace oil seal
- Renewing oil seal=> Page 97

Protected by copyright. Copying for private or commercial purposes, in part or in whole, is not permitted unless authorised by Volkswagen AG. Volkswagen AG does not guarantee or accept any liability with respect to the correctness of information in this document. Copyright by Volkswagen AG.

sateletronica

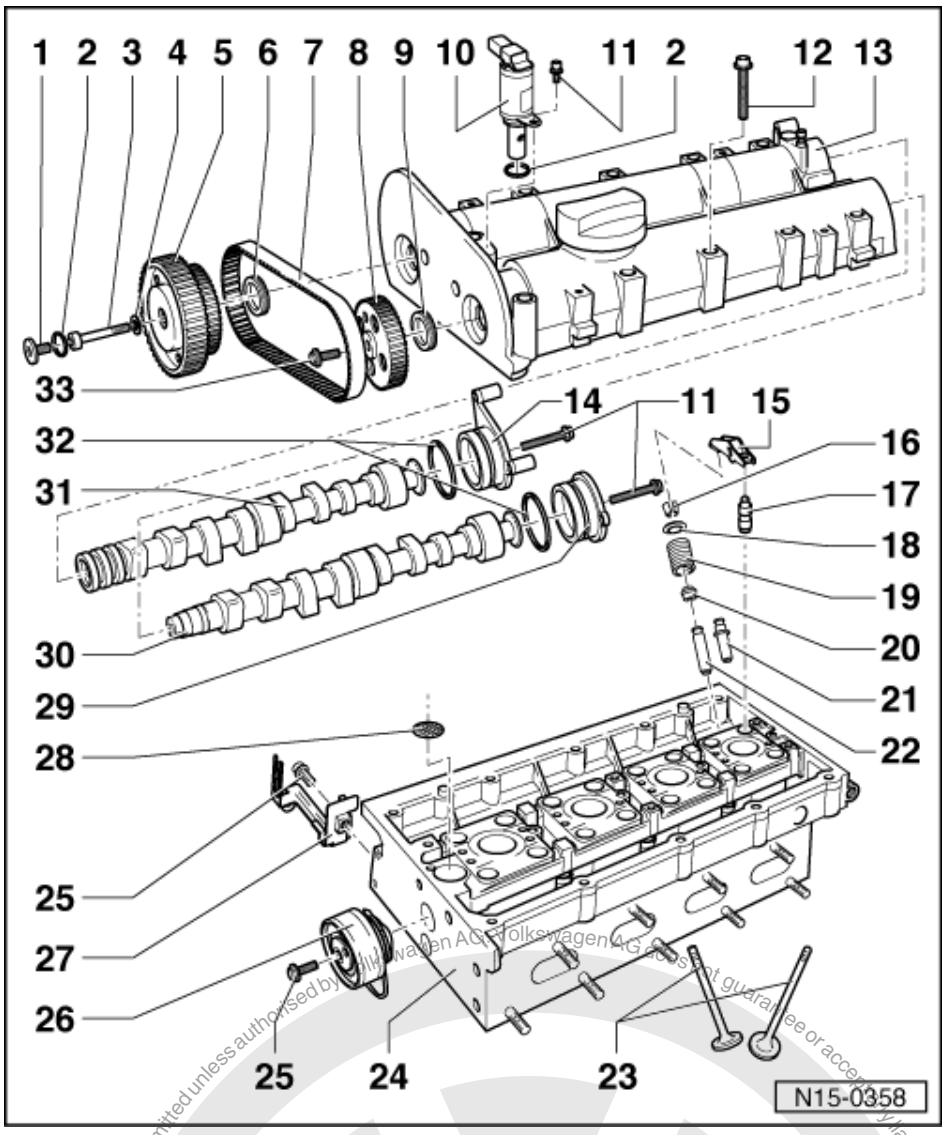

32 O-ring

- Renew
- Coat with oil before inserting

33 20 Nm + 1/4 turn (90 °) further

- Renew

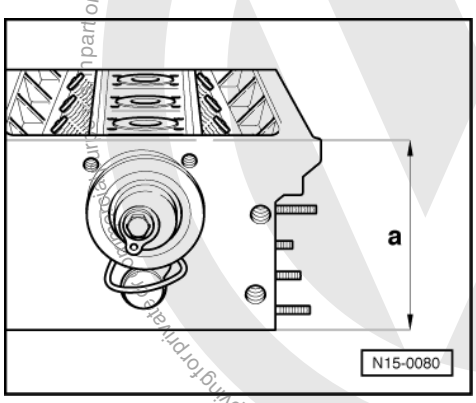

Protected by copyright. Copying for private or commercial purposes, in part or in whole, is not permitted unless authorised by Volkswagen AG. Volkswagen AG does not guarantee or accept any liability with respect to the correctness of information in this document. Copyright by Volkswagen AG.
satelettronica

-> Fig. 1 Reworking cylinder head sealing surface

Cylinder head reworking dimension:
a = At least 108.25 mm

Note:

When the sealing surface has been reworked, the valves must be set deeper by the same amount (rework valve seat inserts), otherwise valves will contact pistons. Ensure when doing this that the permissible minimum dimension is maintained => Page 83 .

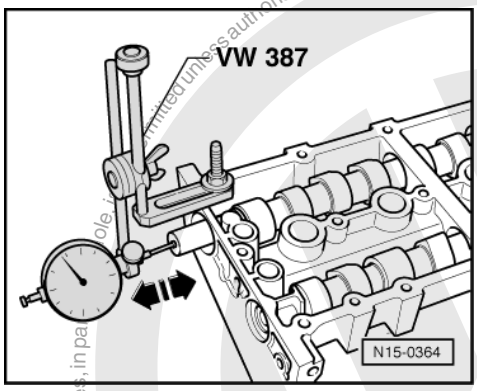

-> Fig. 2 Checking camshaft axial clearance

Special tools, workshop equipment, testers, measuring instruments and auxiliary items required

- VW 387 Universal dial gauge bracket
- Dial gauge

Perform measurements with camshaft housing removed and sealing cover fitted.

Wear limit: max. 0.40 mm

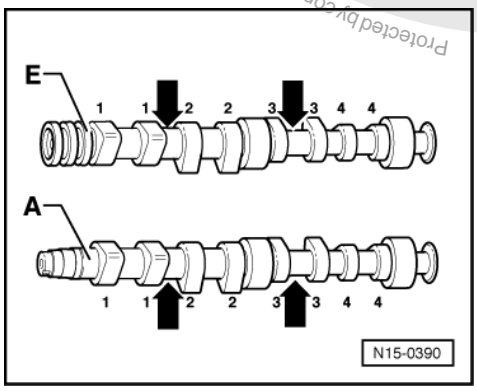

-> Fig.3 Camshaft identification, valve timing

Identification

Identification between cam pairs		
	Cyl. 1 + 2	Cyl. 3
Inlet shaft -E-	ES.11 BD	DE 036 BC

Protected by copyright. Copying for private or commercial purposes, in part or in whole, is not permitted unless authorised by Volkswagen AG. Volkswagen AG does not guarantee or accept any liability with respect to the correctness of information in this document. Copyright by Volkswagen AG.
satelettronica

Identification between cam pairs		
	Cyl. 1 + 2	Cyl. 3
Exhaust shaft -A-	ES.12 BD	036 BA

Valve timing at 1 mm valve lift

	Inlet valve	Exhaust valve
Opens ATDC	20.6...19.4 °	---
Closes ABDC	45.7...5.7 °	---
Opens BBDC	---	20.2 °
Closes BTDC	---	15.3 °

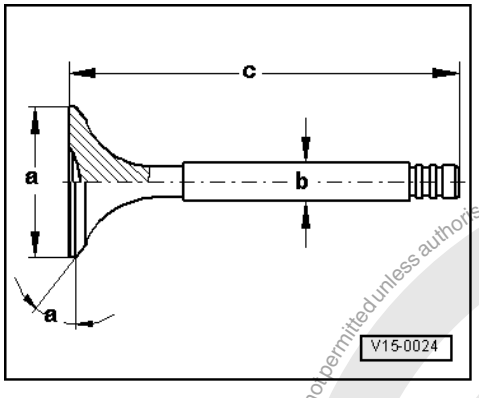

-> Fig. 4 Valve dimensions

Note:

Valves must not be reworked. Only lapping-in is permitted.

Dimension		Inlet valve	Exhaust valve
øa	mm	29.5	26.0
øb	mm	5.973	5.953
c	mm	100.9	100.5
α	<°	45	45

2.2 - Reworking valve seats

Special tools, workshop equipment, testers, measuring instruments and auxiliary items required

- Depth gauge
- Valve seat refacing tool

Notes:

- When repairing engines with leaking valves, it is not sufficient to replace or renew valve seats and valves. It is also necessary to check the valve guides for wear. This particularly important on high mileage engines => Page 100 .
- The valve seats should only be reworked just enough to produce a perfect seating pattern. The maximum permissible reworking dimension must be calculated before work is carried out. If the reworking dimension is exceeded, the function of the hydraulic tappets can no longer be guaranteed and therefore the cylinder head should be renewed.

Protected by copyright. Copyright by Volkswagen AG. Volkswagen AG does not guarantee or accept any liability with respect to the correctness of information in this document. Copying for private or commercial purposes, in part or in whole, is not permitted unless authorised by Volkswagen AG.
satelettronica

The max. permissible reworking dimension is calculated as follows:

- Insert valve and press firmly against seat.

Note:

If the valve is to be renewed as part of a repair, use a new valve for the calculation.

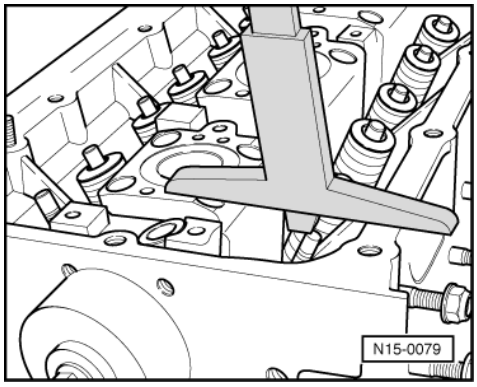

- -> Measure distance between end of valve stem and upper edge of cylinder head.
- Calculate max. permissible reworking dimension from measured distance and minimum dimension.

Minimum dimension:
Inlet valve 7.6 mm
Exhaust valve 7.6 mm

Measured distance minus minimum dimension
= max. permissible reworking dimension.

Example:

-	Measured distance	8.0	mm
	Minimum dimension	7.6	mm
=	max. perm. rework dimension*	0.4	mm

*) The max. permissible reworking dimension is shown on illustrations for reworking valve seats as dimension "b".

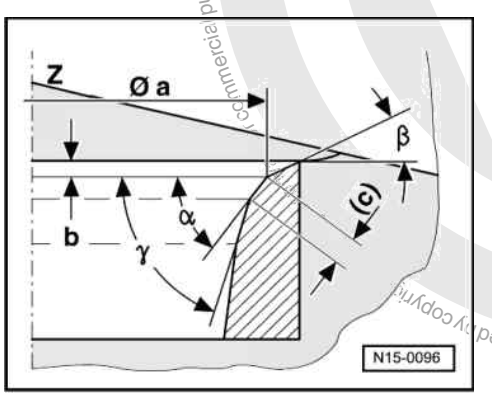

-> Reworking inlet valve seat

a	= 28.7 mm ø
b	= Max. permissible reworking dimension*
c	= 1.5...1.8 mm
Z	= Cylinder head lower edge
α	= 45 °valve seat angle
β	= 30 °upper correction angle
γ	= 60 °lower correction angle

satelettronica

Reworking exhaust valve seat

a	= ø25.0 mm
b	= Max. permissible reworking dimension*
c	= approx. 1.8 mm
Z	= Cylinder head lower edge
α	= 45 °valve seat angle
β	= 30 °upper correction angle
γ	= 60 °lower correction angle

*) Calculating max. permissible reworking dimension => Page 84 .

2.3 - Checking camshaft timing adjustment

The camshaft adjustment is dependant upon load and speed. Oil pressure is directed to the camshaft adjuster (mechanical adjustment unit) by the camshaft adjustment solenoid valve and the camshaft adjuster then re-aligns the valve timing.

Special tools, workshop equipment, testers, measuring instruments and auxiliary items required

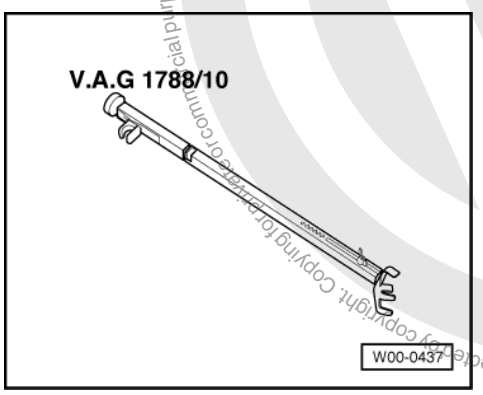

- V.A.G 1788/10 Engine speed adjuster
- Hand multimeter V.A.G 1526 or multimeter V.A.G 1715
- Fault reader V.A.G 1551 (or vehicle system tester V.A.G 1552) with cable V.A.G 1551/3
- Adapter set V.A.G 1594
- Test box V.A.G 1598/31
- Current flow diagram

Checking function of camshaft adjuster

Check conditions

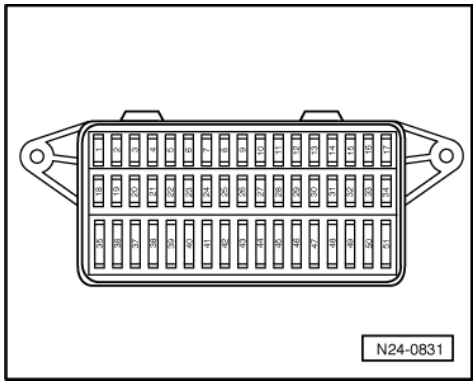

- -> Fuse Nos. 30, 31 and 36 must be OK.

Protected by copyright. Copying for private or commercial purposes, in whole or in part, is not permitted unless authorised by Volkswagen AG. Volkswagen AG does not guarantee or accept any liability with respect to the correctness of information in this document. Copyright by Volkswagen AG.
satelettronica

- Coolant temperature must be at least 80 °C, =>display group 04, display zone 3.

Test sequence

- Connect fault reader V.A.G 1551 (V.A.G 1552). Start engine and select engine control unit with "Address word" 01. Connecting fault reader and selecting engine control unit:

=> Repair group 01; Self-diagnosis general: Connecting fault reader V.A.G 1551 and selecting engine electronics control unit. Self-diagnosis general: Connecting fault reader V.A.G 1551 and selecting engine electronics control unit.

-> Indicated on display:

```
Rapid data transfer      HELP
Select function XX
```

- Press keys 0 and 4 for the "Introduce basic setting" function and confirm entry with Q key.

-> Indicated on display:

```
Basic setting
Input display group number XXX
```

- Press keys 0, 9 and 4 for "Display group number 94" and confirm entry with Q key.

-> Indicated on display:
(1...4 = Display zones)

```
System in basic setting      94
     1      2    3      4
```

- Set an engine speed of 2500...6000 rpm with speed regulator V.A.G 1788/10:
- Check specifications in display zones 1...3.
- Observe the display for the operating mode of the camshaft adjustment in display zone 2.
  Specification: "CS-ctrlON"

Note:

Display zone 2 shows whether the camshaft has actually been adjusted.

If the diagnosis is initiated from engine control unit the display in display zone 3 jumps from "Test OFF" to "Test ON".

- Continue to maintain the speed at 2500...6000 rpm until the specification "Syst. OK" appears in display zone 3.
- Press ⇒key.
- Press keys 0 and 6 for the function "End output" and confirm entry with the Q key.
- Switch off ignition.

The following faults can be present if "CS-crtlOFF" is displayed in display zone 2:

◆ Engine control unit is performing the adaption of the position of the inlet camshaft (phase position):

- Wait a moment.

◆ Camshaft adjustment valve (N205) sticking/defective.

- Check camshaft adjustment valve (N205)
  => Page 87 .

If "Syst. n.OK" is displayed in display zone 3, the following faults can be present:

◆ Very thin oil in conjunction with high engine temperatures (exceeding 110 °C)

- Allow the engine to cool down or replace the engine oil.

Protected by copyright. Copying for private or commercial purposes, in part or in whole, is not permitted unless authorised by Volkswagen AG. Volkswagen AG does not guarantee or accept any liability with respect to the correctness of information in this document. Copyright by Volkswagen AG.
satelettronica

- Oil pressure too low in cylinder head

- Check oil pressure and oil pressure switch => Page 117 .

- Camshaft adjustment valve (N205) sticking/defective

- Check camshaft adjustment valve (N205)
  => Page 87 .

Checking camshaft adjustment valve

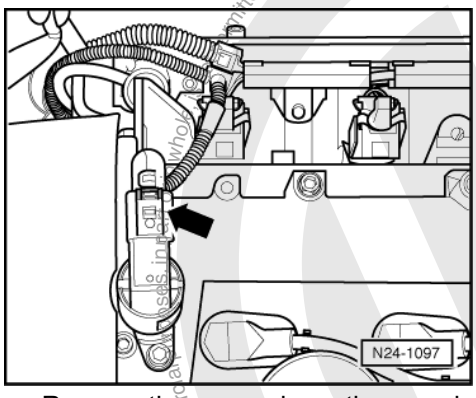

- Remove the cover above the camshaft housing.
- -> Pull the 2-pin connector off camshaft adjustment valve (N205) -arrow-.

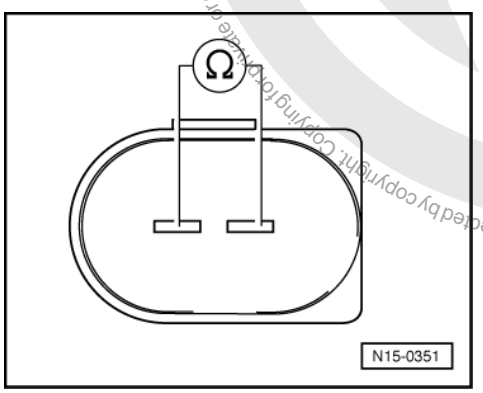

- -> Connect multimeter V.A.G 1526 to camshaft adjustment valve to measure resistance using aux. cables from V.A.G 1594 A.
  Specification: 10.0...15.0 ω(at room temperature).

Note:

The resistance figures are valid for approx. 20 °C. At higher temperatures the resistance figures will increase.

If the specification is not attained:

- Replace camshaft adjustment valve (N205) => Page 76 , item 10 .

- Interrogate fault memory, if necessary, repair any faults and then erase fault memory:

=> Repair group 01; Fault memory; Interrogating and erasing engine control unit fault memory Fault memory Interrogating and erasing engine control unit fault memory

Protected by copyright. Copying for private or commercial purposes, in part or in whole, is not permitted unless authorised by Volkswagen AG. Volkswagen AG does not guarantee or accept any liability with respect to the correctness of information in this document. Copyright by Volkswagen AG.
satelettronica

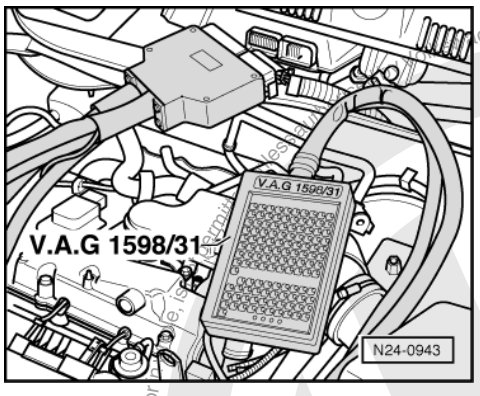

If the specification is obtained:

- -> Connect test box V.A.G 1598/31 to control unit wiring harness. The engine control unit remains disconnected.

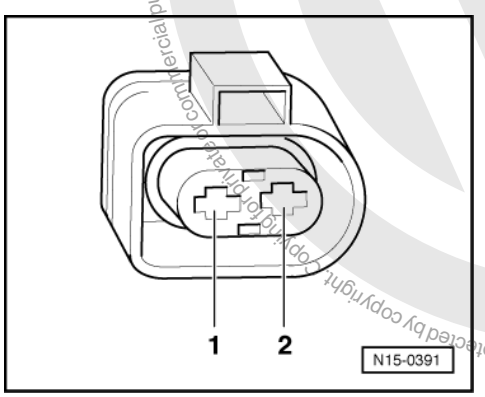

- -> Check wiring between test box and 2-pin connector for open circuit using current flow diagram:
  Contact 2 and test box socket 115
  Wire resistance: max. 1.5 ω
- Additionally check wire for short to vehicle earth and to battery positive.
  Specification: ∞ω

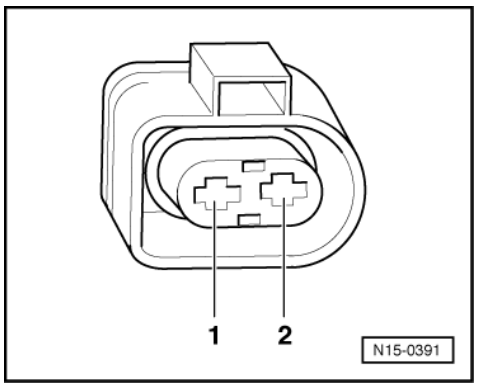

- -> Check wire between 2-pin connector contact 1 and fuel pump relay (J17) for open circuit using current flow diagram.
  Wire resistance: max. 1.5 ω

If no fault is detected in the wiring:

- Replace engine control unit

=> Repair group 24; Engine control unit; Replacing engine control unit Engine control unit Replacing engine control unit

Protected by copyright. Copying for private or commercial purposes, in part or in whole, is not permitted unless authorised by Volkswagen AG. Volkswagen AG does not guarantee or accept any liability with respect to the correctness of information in this document. Copyright by Volkswagen AG.
satelettronica

2.4 - Removing and installing camshaft adjuster and exhaust camshaft sprocket

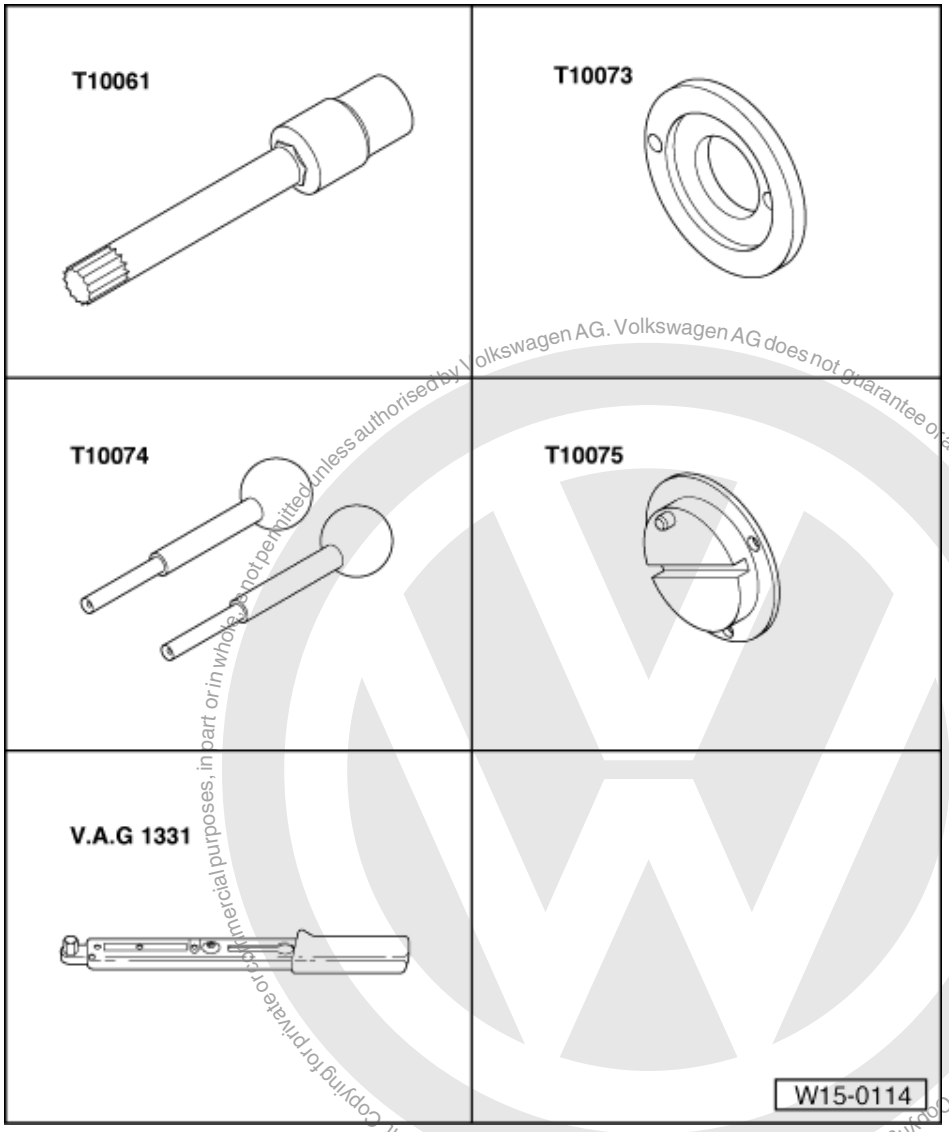

Protected copyright. Copying for private or commercial purposes, in part or in whole, is not permitted unless authorised by Volkswagen AG. Volkswagen AG does not guarantee or accept any liability with respect to the correctness of information in this document. Copyright by Volkswagen AG.

satelettronica

Special tools, workshop equipment, test and measuring appliances and auxiliary items required

- T10061 Key
- T10073 Retaining plate
- T10074 Locking pins
- T10075 Locking flange
- V.A.G 1331 Torque wrench (5...50 Nm)

Removing

- First remove both toothed belts
  => Page 58 .
- Turn crankshaft back slightly.
- Remove the locking pins from camshaft adjuster and exhaust camshaft sprocket.

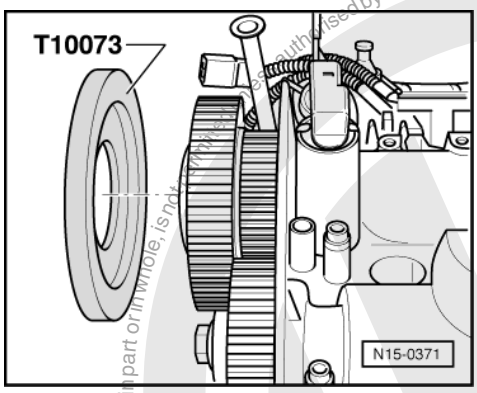

- -> First fit the retaining plate T10073 on the camshaft adjuster.

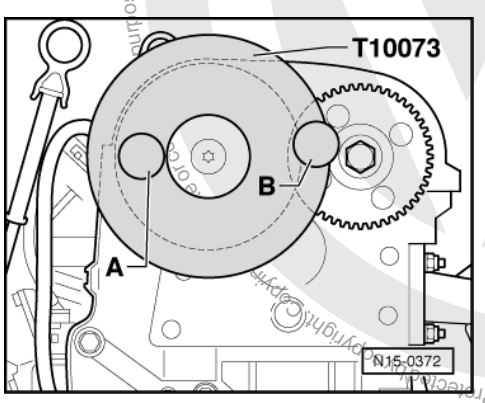

- -> Push locking pins -A- into the fitted holes in camshaft adjuster and camshaft housing onto stop.
- Then lock exhaust camshaft sprocket with locking pin -B- in 2nd hole of the retaining plate T10073 and push into the camshaft housing fitted hole onto stop.

Note:

Turning the exhaust camshaft sprocket slightly with a ring spanner on the securing bolt until the fitted holes align will make locking easier.

- Remove camshaft adjuster plug.

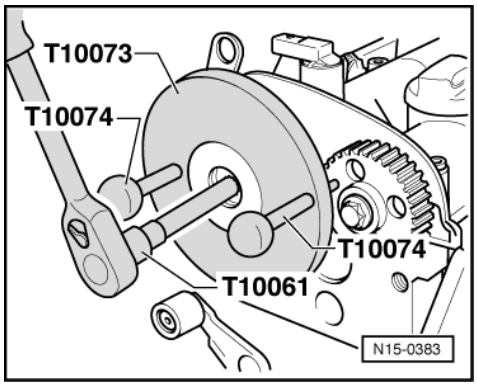

- -> Loosen camshaft adjuster central bolt in clockwise direction using key T10061.

Note:

The camshaft adjuster central bolt has a left-hand thread.

- Remove the hexagon bolt from exhaust camshaft sprocket.

satelettronica

Authorised by Volkswagen AG. Volkswagen AG does not guarantee or accept any liability with respect to the correctness of information in this document. Copyright by Volkswagen AG. Protected by copyright. Copying for private or commercial purposes, in part or in whole, is not permitted unless

Note:

The hexagon bolt securing the exhaust camshaft sprocket has a right-hand thread and must be replaced.

- Pull the locking pins T10074 carefully out of the retaining plate T10073 and take the retaining plate off the camshaft adjuster.
- Remove the central bolt from camshaft adjuster and take the camshaft adjuster carefully out of the camshaft housing.
- Place the face side of the camshaft adjuster on a clean surface.
- Remove the exhaust camshaft sprocket.

Installing

- The pistons must not be positioned at TDC.

- Oil the threads and the bolt head contact surface of the central bolt for the camshaft adjuster.

- Install the exhaust camshaft sprocket and fit a new bolt hand-tight.

Note:

Observe position of camshaft sprocket to camshaft keyway.

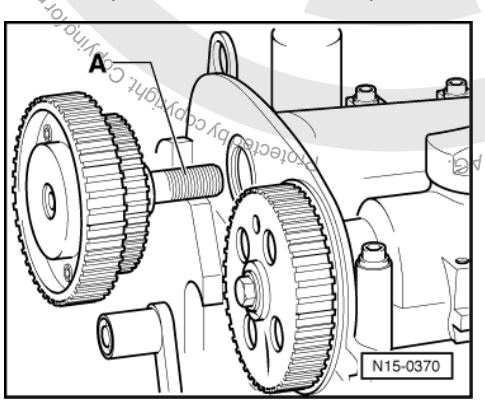

- -> Guide the central bolt -A- with a new washer through the camshaft adjuster onto stop.
- Screw the central bolt several threads in the inlet camshaft (note left left-hand thread).
- Now slide the camshaft adjuster carefully in the inlet camshaft oil seal.

Note:

When replacing the camshaft adjuster, the oil seal must also be replaced. Ensure that the oil seal is not damaged when guiding the camshaft adjuster in the camshaft housing.

- Tighten the central bolt further by hand until the camshaft adjuster can still be turned lightly against the camshaft.

Note:

The camshaft adjuster must turn easily compared to the camshaft.

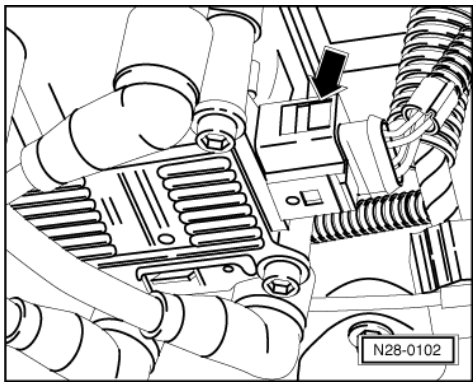

satelettronica

- -> Pull 4 pin connector off ignition transformer -arrow-.
- Remove the ignition transformer and the inlet camshaft end cover.

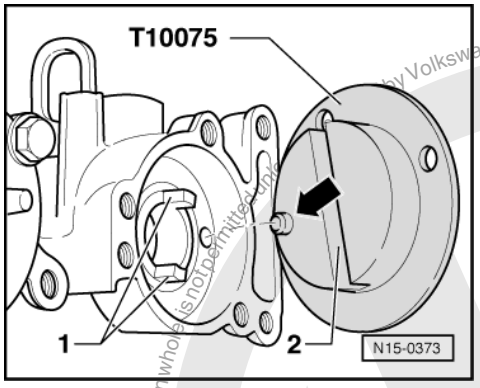

- -> Insert coupling side of locating flange T10075 in the inlet camshaft housing so that the locating pin -arrow- of the tool locates in the small hole in the inlet camshaft axial bearing and the camshaft lugs -1- locate in the recess -2- of the tool.

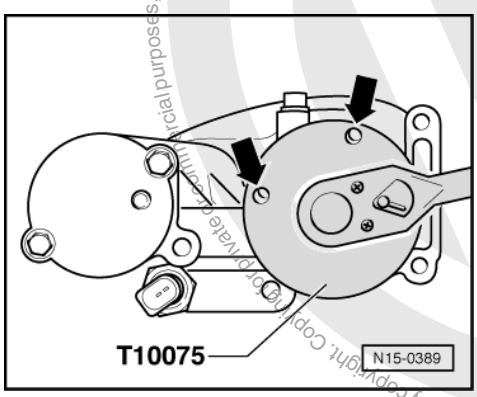

- -> Turn inlet camshaft on hexagon of locating flange T10075 until the holes in the tool align with the threaded holes in the camshaft housing -arrows-.
- Secure the locating flange with two M6X15 bolts and tighten them to 10 Nm.

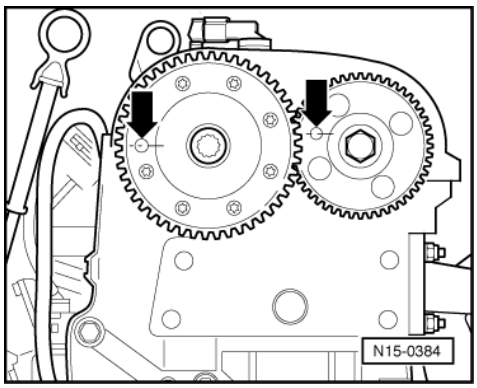

- -> Turn the camshaft adjuster until the fitted holes in the camshaft adjuster and camshaft housing align -arrow-.

Copyright by Volkswagen AG. Volkswagen AG does not guarantee or accept any liability with respect to the correctness of information in this document. Copyright by Volkswagen AG. Protected by copyright. Copying for private or commercial purposes, in part or in whole, is not permitted unless authorised by Volkswagen AG.
satelettronica

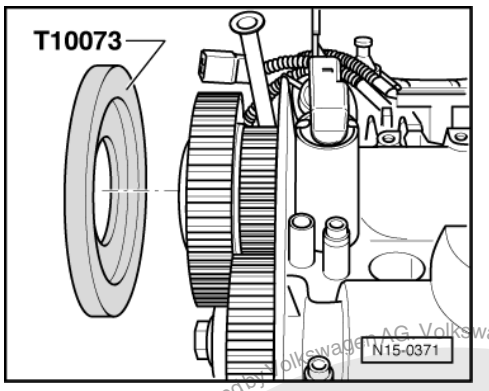

- -> Place the retaining plate T10073 on the camshaft adjuster.

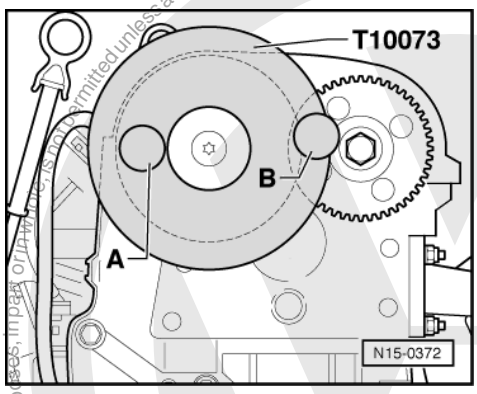

- -> Push locking pin -A- in the fitted hole in the camshaft adjuster and camshaft housing onto stop.
- Then secure exhaust camshaft sprocket by pushing locking pin -B- into 2nd hole in the retaining plate T10073 onto stop in the fitted hole of the camshaft housing.

Note:

The locking will be made easier when the exhaust camshaft sprocket is turned slightly with a ring spanner on the securing bolt, until the fitted holes align.

- Fit new securing bolt to exhaust camshaft sprocket and tighten to 20 Nm. Then turn the bolt 1/4 turn (90 °) further.

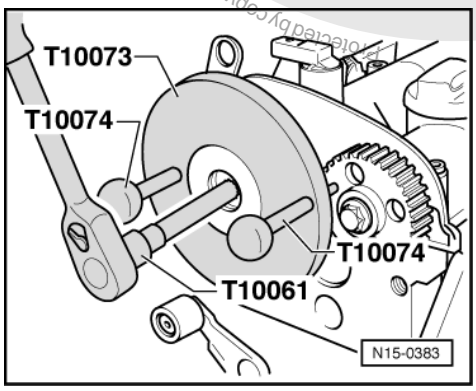

- -> Then tighten central bolt of the camshaft adjuster (left-hand thread) and new washer to 40 Nm.
- Then turn the bolt 1/4 turn (90 °) further.
- Remove retaining plate T10073.
- Lock exhaust camshaft sprocket again with locking pins T10074.

Install both toothed belts as follows:

Protected by Copyright. Copying for commercial purposes, in part or in whole, is not permitted unless authorised by Volkswagen AG. Volkswagen AG does not guarantee or accept any liability with respect to the correctness of information in this document. Copyright by Volkswagen AG.
satelettronica

Note:

If a piston is at TDC the valves could strike the piston when turning the camshafts.

- Fit toothed belt for coupling the camshafts in a clockwise direction starting at top on inlet camshaft sprocket and then onto exhaust camshaft sprocket. The slack section of the toothed belt must be downwards. Note direction of rotation with used belts.

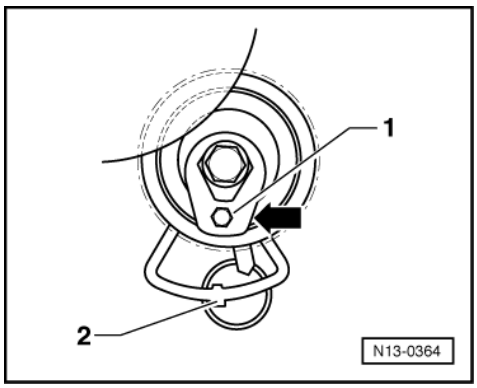

- -> Turn coupling drive tensioning roller clockwise towards marking window -arrow- using a hexagon key -1- (tensioning roller in untensioned position).
- Press lower section of toothed belt for coupling the camshafts upwards with tensioning roller and fit tensioning roller securing bolt.
- Tighten securing bolt hand tight. The lug in the base plate must engage in the hole in the cylinder head -2-.

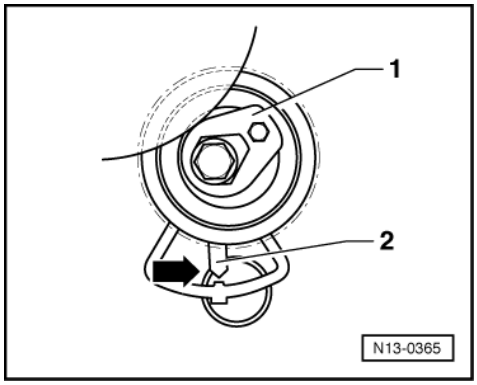

- -> Then tension toothed belt by turning tensioning roller anti-clockwise, with a hexagon key item -1-, until the indicator -2- aligns over the lug in the base plate in the marking window -arrow-.
- Tighten clamping nut on tensioning roller.
  Tightening torque: 20 Nm

Note:

The camshafts must remain secured against turning until the main dive toothed belt has been fitted.

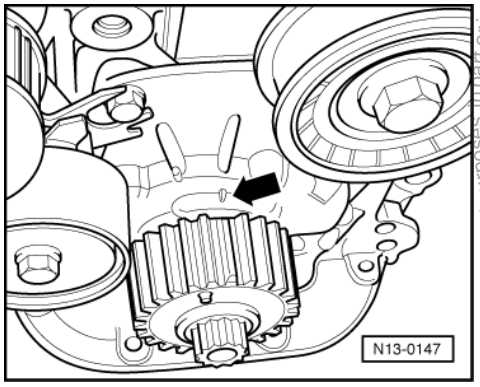

Protected by copyright. Copying for private or commercial purposes, in part or in whole, is not permitted unless authorised by Volkswagen AG. Volkswagen AG does not guarantee or accept any liability with respect to the correctness of information in this document. Copyright by Volkswagen AG.
satelettronica

- -> Set the crankshaft to TDC No. 1 cylinder. The tooth with end ground down must align with the mark on the oil pump.

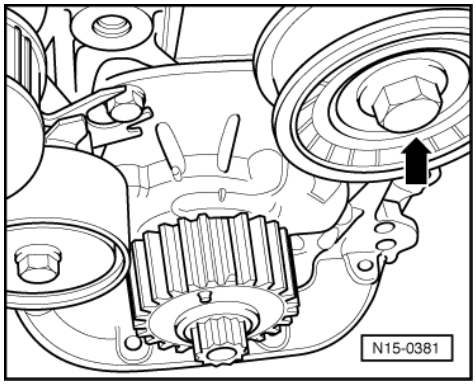

- -> Remove the main toothed belt drive idler roller -arrow-.
- Loosen securing bolt of the main belt drive tensioning roller.
- Fit main drive toothed belt on in anti-clockwise direction starting at water pump then via tensioning roller, crankshaft and exhaust camshaft sprocket. Note direction of rotation for used belts.
- Install the main toothed belt drive idler roller and tighten it to 50 Nm.

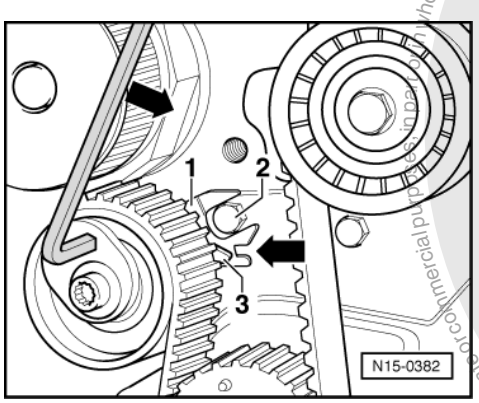

- -> Then tension toothed belt by turning the tensioning roller in direction of arrow until the indicator -3- aligns with the groove in the base plate -arrow-.
- Tighten tensioning roller with Torx bit from V.A.G 1766.
  Tightening torque: 20 Nm
- Remove locking flange T10075 and locking bolt T10074 from exhaust camshaft sprocket.
- Rotate crankshaft two turns in engine direction of rotation.

The holes in camshaft adjuster and exhaust camshaft sprocket must align with the fitted holes in camshaft housing.

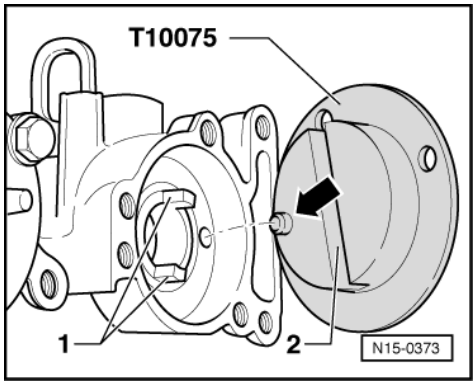

- Lock exhaust camshaft sprocket again with locking pin T10074.

Protected by copyright. Copying for private or commercial purposes, in part or in whole, is not permitted unless authorised by Volkswagen AG. Volkswagen AG does not guarantee or accept any liability with respect to the correctness of information in this document. Copyright by Volkswagen AG.
satelettronica

- -> Insert coupling side of locking flange T10075 in the inlet camshaft housing so that the locking pin -arrow- of the tool locates in the small hole in inlet camshaft axial bearing and the camshaft lugs -1- locate in the groove -2- in the tool.

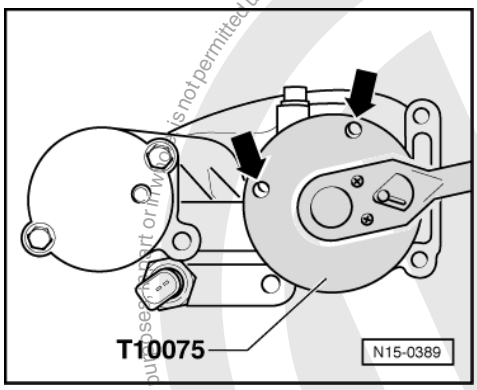

- -> Carefully turn inlet camshaft on hexagon of locking flange T10075 opposite to normal engine direction of rotation onto stop and hold.

The tool must now move to the position which was attained during the adjustment process, i.e. the holes in locking flange T10075 must align with the threaded holes in the camshaft housing -arrows-.

Note:

If the original position of the locking and adjustment tool is not attained, both toothed belts must be removed, the camshaft adjuster must be loosened and the process repeated.

- Fit the camshaft adjuster locking bolt and tighten to 25 Nm.
- If the adjustment is OK remove gearbox side adjustment tool and refit the inlet camshaft end plate with ignition transformer.

The rest of the assembly is basically a reverse of the dismantling sequence.

satelettronica

2.5 - Renewing camshaft oil seals

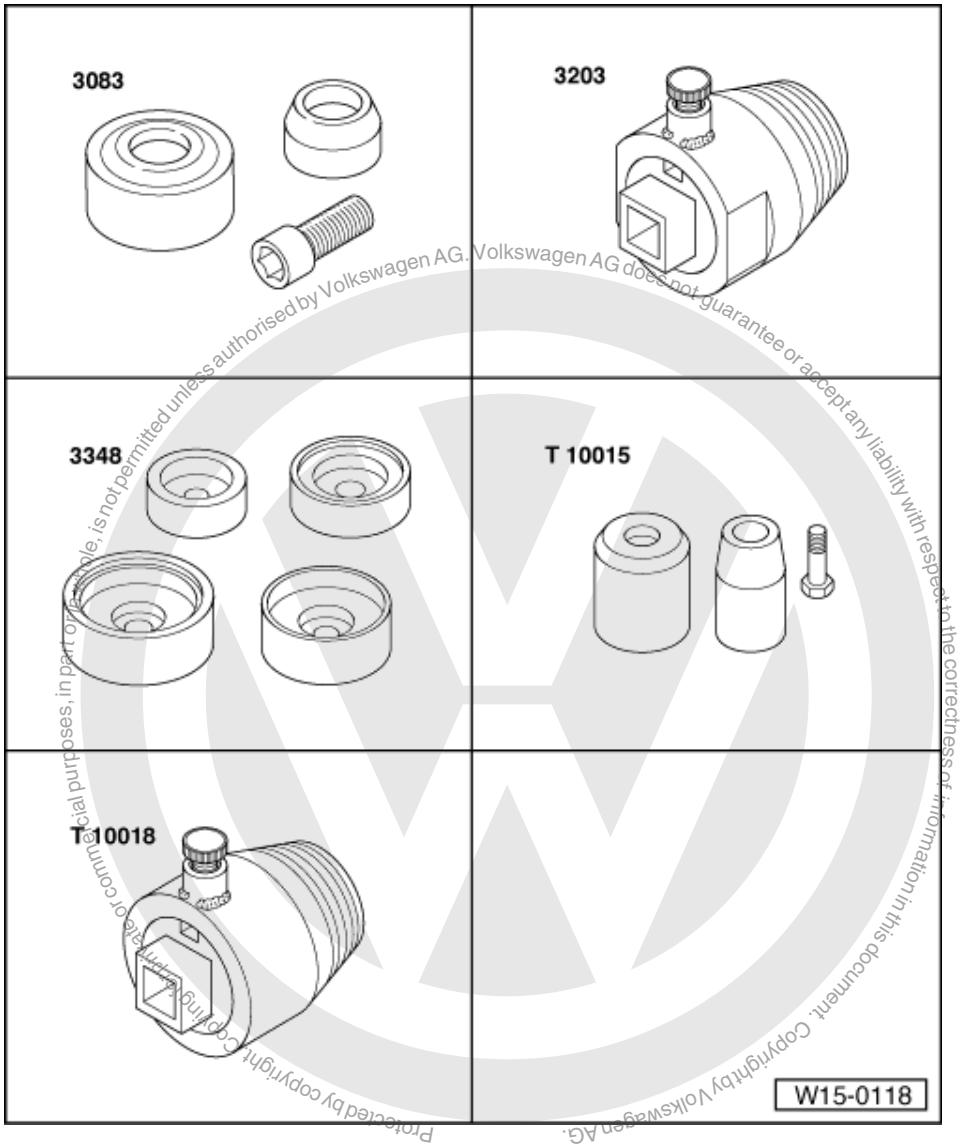

Protected by copyright. Copying for commercial purposes, in part or in whole, is not permitted unless authorised by Volkswagen AG. Volkswagen AG does not guarantee or accept any liability with respect to the correctness of information in this document. Copyright by Volkswagen AG.

satelettronica

Special tools, workshop equipment, test and measuring appliances and auxiliary items required

- 3083 Oil seal fitting tool
- 3203 Oil seal removal tool
- 3348 Assembly tool
- T10015 Fitting tool
- T10018 Oil seal extractor

- First remove both toothed belts
  => Page 58 .
- Turn crankshaft back slightly.
- Remove the camshaft adjuster or the exhaust camshaft sprocket, => Page 89 .

Replace inlet camshaft oil seal => Page 98 .

Replace exhaust camshaft oil seal, => description of work follows.

Prerequisites

- Both toothed belts removed.
- The pistons must not be positioned at TDC.
- Camshaft adjuster removed.

- Exhaust camshaft sprocket removed.

Removing

- Unscrew inner part of oil seal extractor T 10018 two turns (approx. 3 mm) out of the outer part and lock in position with knurled screw.

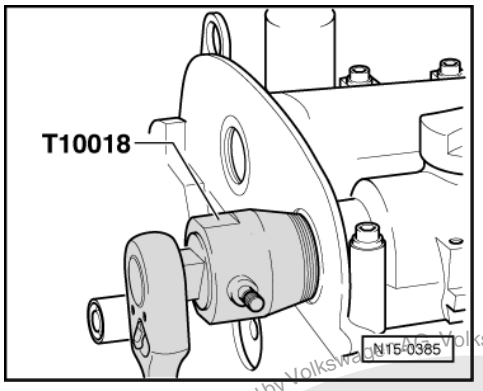

- Oil threaded head of oil seal extractor.
- -> Screw puller T 10018 forcibly as far as possible into oil seal.
- Loosen knurled screw and turn inner part of extractor against camshaft until oil seal has been extracted.

Installing

- Lightly oil sealing lip of oil seal.

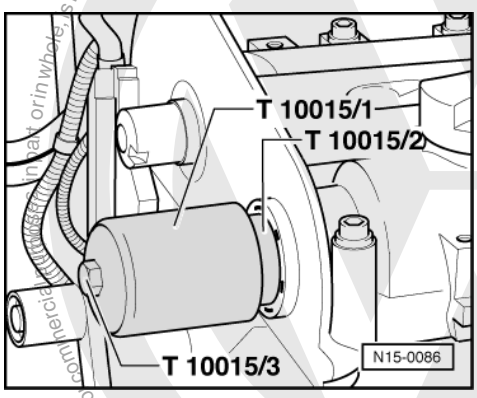

- -> Place the guide sleeve T 10015/2 onto the camshaft journal.
- Slide oil seal over the guide sleeve.
- Press oil seal in onto stop with press sleeve T 10015/1 and bolt T 10015/3.
- Install exhaust toothed belt sprocket => Page 89 .

When installing toothed belt => Page 58 .

The rest of the assembly is basically a reverse of the dismantling sequence.

Replacing inlet camshaft oil seal

Prerequisites

- Both toothed belts removed.
- The pistons must not be positioned at TDC.
- Camshaft adjuster removed.

satelettronica

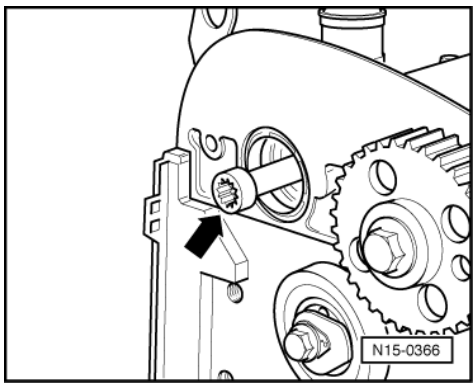

Removing

- -> Turn the camshaft adjuster central bolt (left-hand thread) into the camshaft onto stop -arrow-.
- Unscrew inner part of oil seal extractor 3202 out of the outer part until 3 threads remain in the outer part and lock in position with knurled screw.

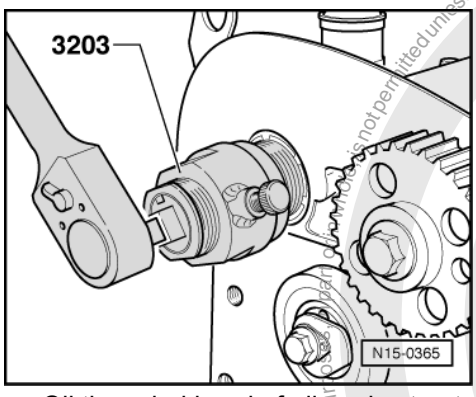

- Oil threaded head of oil seal extractor.
- -> Screw puller 3203 forcibly as far as possible into oil seal.
- Loosen knurled screw and turn inner part of extractor against camshaft until oil seal has been extracted.

Installing

- Lightly oil sealing lip of oil seal.

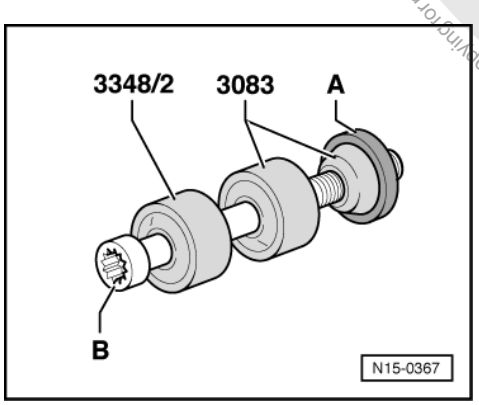

- -> Slide the oil seal -A- (conical side first) evenly over the guide sleeve from 3083.
- Place thrust pieces 3348/2 and 3083 as well as guide sleeve including oil seal onto central bolt -B-.
- Screw central bolt carefully several threads into the camshaft housing (left-hand thread).
- Slide thrust pieces with guide sleeve and oil seal onto the camshaft housing so that the oil seal contacts evenly.

Protected by copyright. Copying for private or commercial purposes, in part or in whole, is not permitted unless authorised by Volkswagen AG. Volkswagen AG does not guarantee or accept any liability with respect to the correctness of information in this document. Copyright by Volkswagen AG.
satelettronica

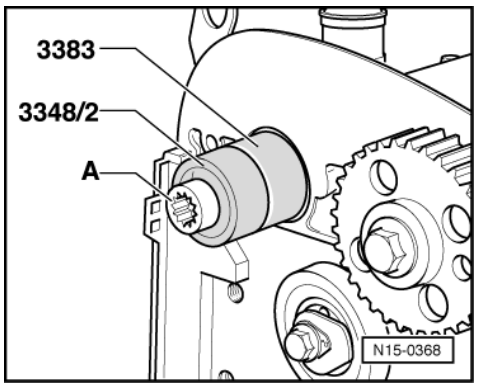

- -> Press oil seal and thrust pieces 3348/2 and 3083 into camshaft housing onto stop with central bolt -A-.
- Install camshaft adjuster => Page 89 .

When installing toothed belt => Page 58 .

The rest of the assembly is basically a reverse of the dismantling sequence.

2.6 - Checking valve guides

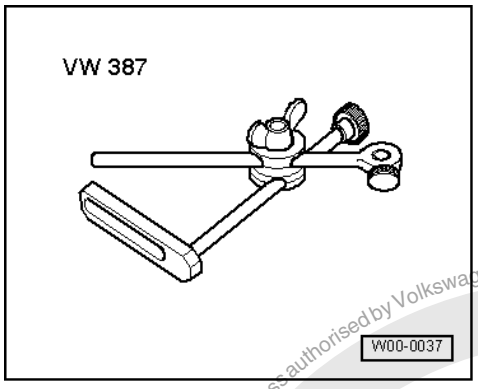

Special tools, workshop equipment, testers, measuring instruments and auxiliary items required

- VW 387 Universal dial gauge bracket
- Dial gauge

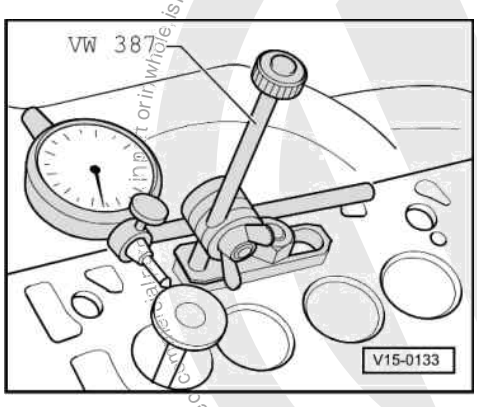

Test sequence

- -> Insert new valve into guide until end of valve stem is flush with end of guide. Due to the slight difference in stem dimensions, ensure that only an inlet valve is used in the inlet guide and an exhaust valve in the exhaust guide.
- Determine rock.

Protected by copyright. Copyright by Volkswagen AG.
Copyright by Volkswagen AG. Volkswagen AG does not guarantee or accept any liability with respect to the correctness of information in this document. Copying for private or commercial purposes, in part or in whole is not permitted unless authorised by Volkswagen AG.
satelettronica

Wear limit: 0.8 mm

2.7 - Renewing valve guides

Special tools, workshop equipment, testers, measuring instruments and auxiliary items required

- 3360 Driver
- 3363 Hand reamer and cutting fluid

Removing

- First check whether the valve seat insert rings and if necessary the cylinder head sealing surface can be reworked. If this is not the case then the valve guide should not be replaced.
- Press the worn valve guides out with drift 3360 from the camshaft side.

Note:

If repair version guides are already fitted in the cylinder head, these must be pressed out from the combustion chamber side. To do this the cylinder head can be supported on the valve spring seats with sleeve VW 421 and press piece VW 447h.

Installing

- Coat the new valve guides with oil and press with drift 3360 into cold cylinder head from the camshaft side until the shoulder makes contact.

Note:

When the shoulder on guide makes contact, the pressure must not exceed 1.0 t otherwise shoulder may break off.

- Ream guides out with hand reamer 3363 using plenty of cutting fluid.
- Rework valve seats => Page 83 .

Protected by copyright. Copying for private or commercial purposes, in part or in whole, is not permitted unless authorised by Volkswagen AG. Volkswagen AG does not guarantee or accept any liability with respect to the correctness of information in this document. Copyright by Volkswagen AG.

satelettronica

2.8 - Renewing valve stem seals

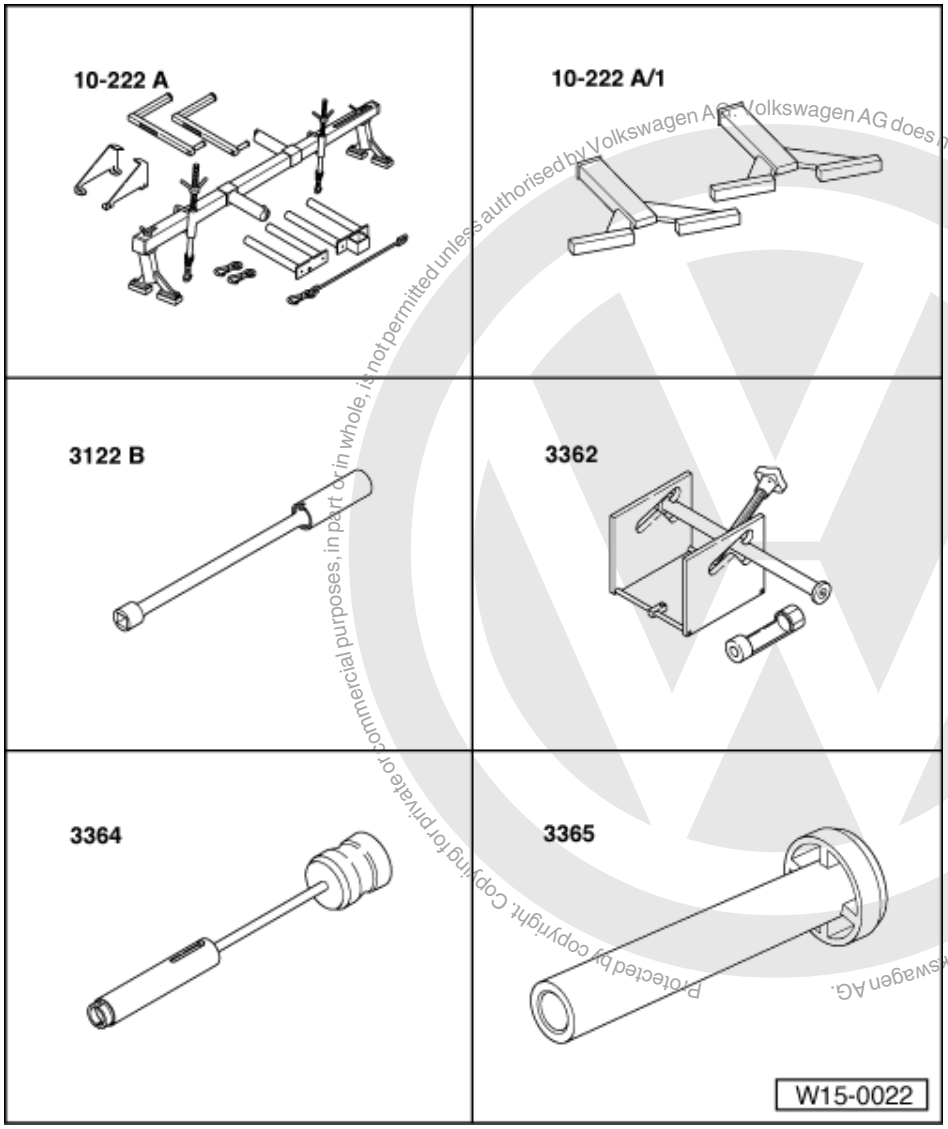

Protected by copyright. Copying for private or commercial purposes, in part or in whole, is not permitted unless authorised by Volkswagen AG. Volkswagen AG does not guarantee or accept any liability with respect to the correctness of information in this document. Copyright by Volkswagen AG.

satelettronica

Special tools, workshop equipment, test and measuring appliances and auxiliary items required

- 10-222A Support bracket
- 10-222A/1 Support for support bracket
- 3122B Spark plug spanner
- 3362 Valve spring compressor with 3362/1 press piece
- 3364 Puller
- 3365 Fitting tool

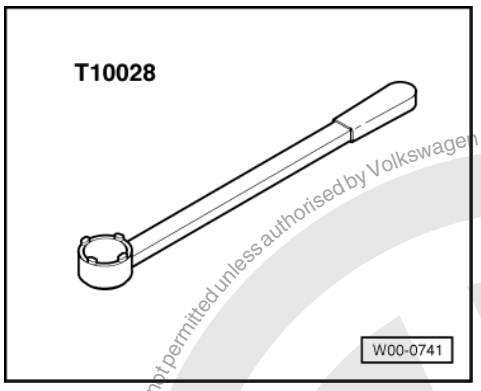

- T 10028 Counter-hold

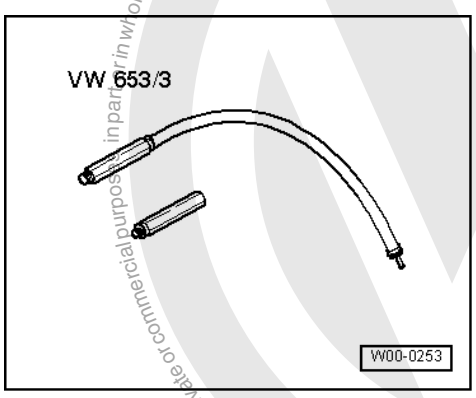

- VW 653/3 Pressure hose

Removing
(with cylinder head fitted)
- First remove main drive toothed belts => Page 58 .
- Then remove camshaft housing => Page 65 .

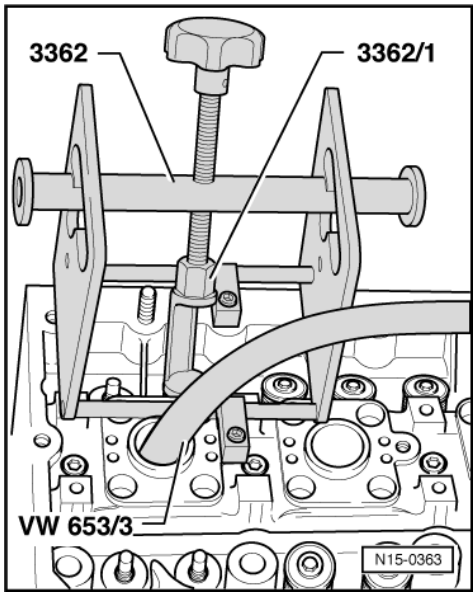

- Remove roller rocker arms and place onto a clean surface. Ensure that roller rocker arms are not interchanged.
- Remove spark plugs with spark plug spanner 3122B.
- Set piston of appropriate cylinder to "bottom dead centre".

Protected by copyright. Copying for private or commercial purposes, in part or in whole, is not permitted unless authorised by Volkswagen AG. Volkswagen AG does not guarantee or accept any liability with respect to the correctness of information in this document. Copyright by Volkswagen AG.
satelettronica

- -> Mount fitting tool 3362 with press piece 3362/1.
- Screw pressure hose VW 653/3 into the spark plug thread.
- Connect pressure hose to compressed air system supplying
  at least 6 bar
  and remove valve springs.
- Pull off valve stem seals with 3364.

Installing

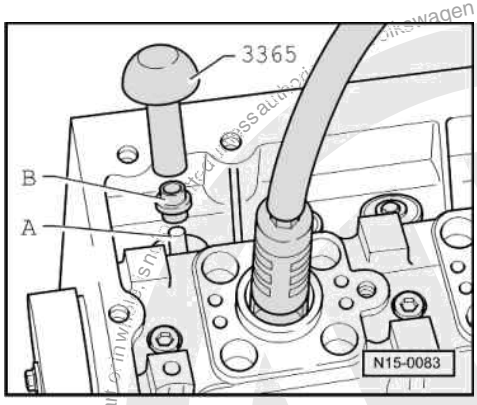

- -> Place the plastic sleeve supplied on the appropriate valve stem. This will prevent the new valve stem seal being damaged.
- Place new valve stem seal in fitting tool 3365.
- Oil valve stem seal sealing lip and press carefully onto the valve guide.

When installing camshaft housing => Page 65 .

Installing toothed belt and adjusting timing => Page 58 .

The rest of the assembly is basically a reverse of the dismantling sequence.

Protected by copyright. Copying for private or commercial purposes, in part or in whole, is not permitted unless authorised by Volkswagen AG. Volkswagen AG does not guarantee or accept any liability with respect to the correctness of information in this document. Copyright by Volkswagen AG.
satelettronica

17 - Lubrication

1 - Removing and installing parts of the lubrication system

1.1 - Removing and installing parts of the lubrication system

Protected by copyright. Copying for private or commercial purposes, in part or in whole, is not permitted unless authorised by Volkswagen AG. Volkswagen AG does not guarantee or accept any liability with respect to the correctness of information in this document. Copyright by Volkswagen AG.

Note:

The oil level must not be above the max. mark - danger of damaging catalyst!

Marks => Page 112 , Fig. 1 .

Checking oil pressure => Page 117

Oil system capacity1):

with oil filter 3.2 ltr.

1) Up-to-date figures:

=> Exhaust emissions test binder

Engine oil specifications:

Note:

Engines are filled at the factory with oil meeting VW standard 503 00. This engine oil is matched to long service intervals. However, you can also use the engine oils listed below.

Use engine oil to VW standard 500 00, 501 01 or 502 00. Only in exceptional cases: Multi-grade oils corresponding to API-SF or SG.

satelettronica

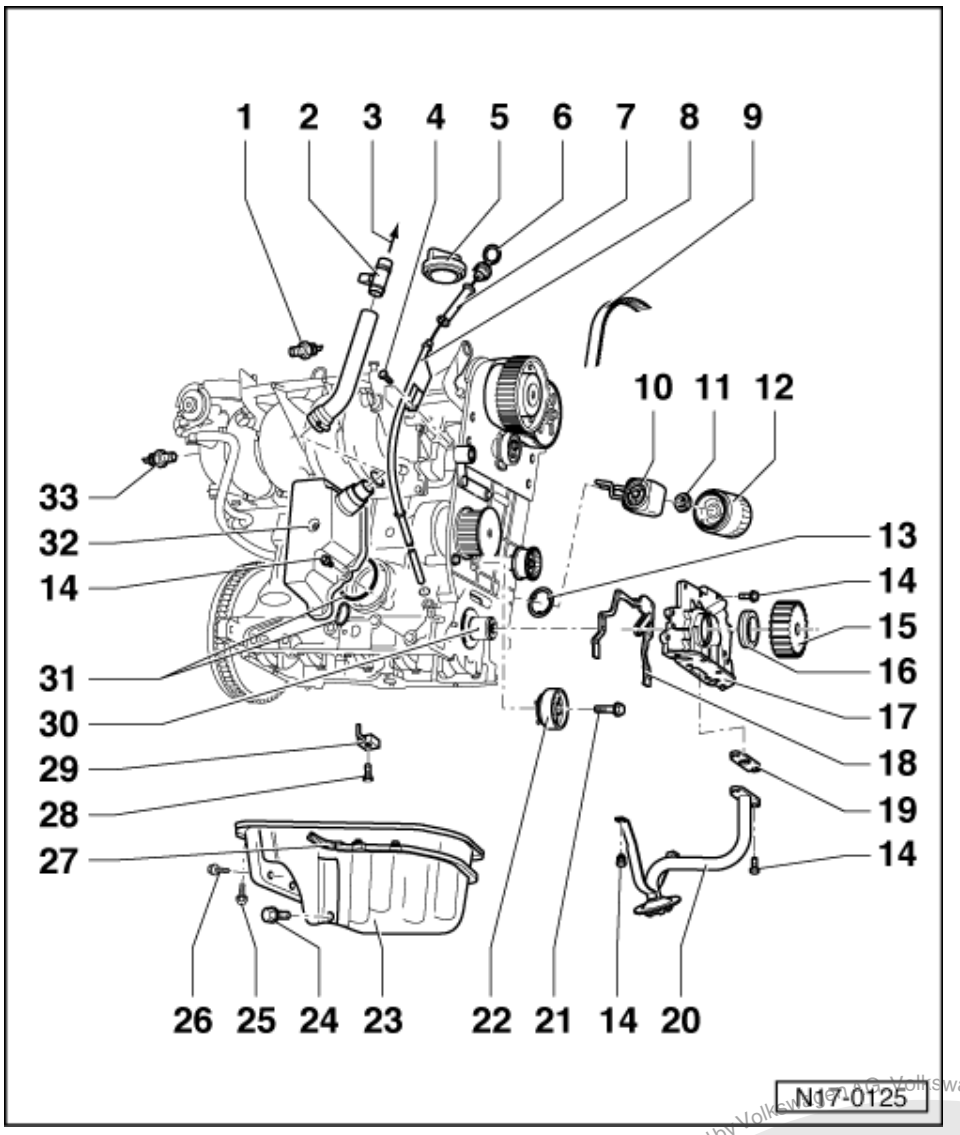

1 0.30 bar oil pressure switch (F1), 25 Nm
- Checking => Page 117
- If sealing ring is leaking nip open and replace.

2 Heater element (N79)
- For crankcase breather
- Check heater element voltage supply between contacts 1 and 2 with engine running:
  Specification:
  At least 11.5 V

3 To air cleaner

4 20 Nm

5 Cap
- Renew seal if damaged

6 Dipstick
- The oil level must not be above the max. mark!
- Markings => Fig. 1

satelettronica
Volkswagen AG does not guarantee or accept any liability with respect to the correctness of information in this document. Copyright by Volkswagen AG.
Protected by copyright. Copying for private or commercial purposes, in part or in whole, is not permitted unless authorised by Volkswagen AG.

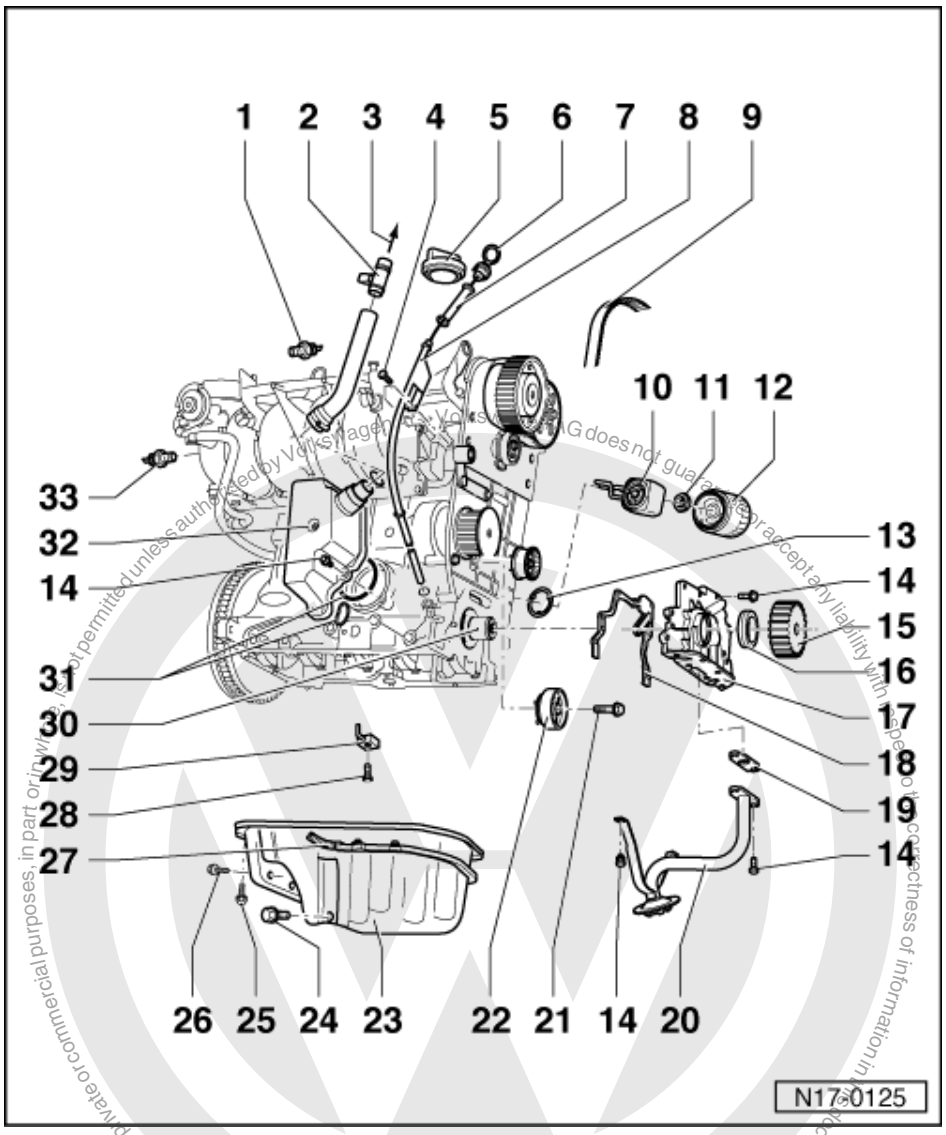

7 Guide
- Pull off to extract oil

8 Guide tube

9 Main drive toothed belt
- Mark D.O.R. before removing
- Check for wear
- Do not kink
- Toothed belt routing => Fig. 1
- Removing, installing and tensioning
  => Page 58

10 Oil cooler
- Ensure clearance to adjacent components
- Coat contact area outside the seal with AMV 188 100 02
- See note
  => Page 105
- Coolant hose connection diagram =>Page 128

satelettronica

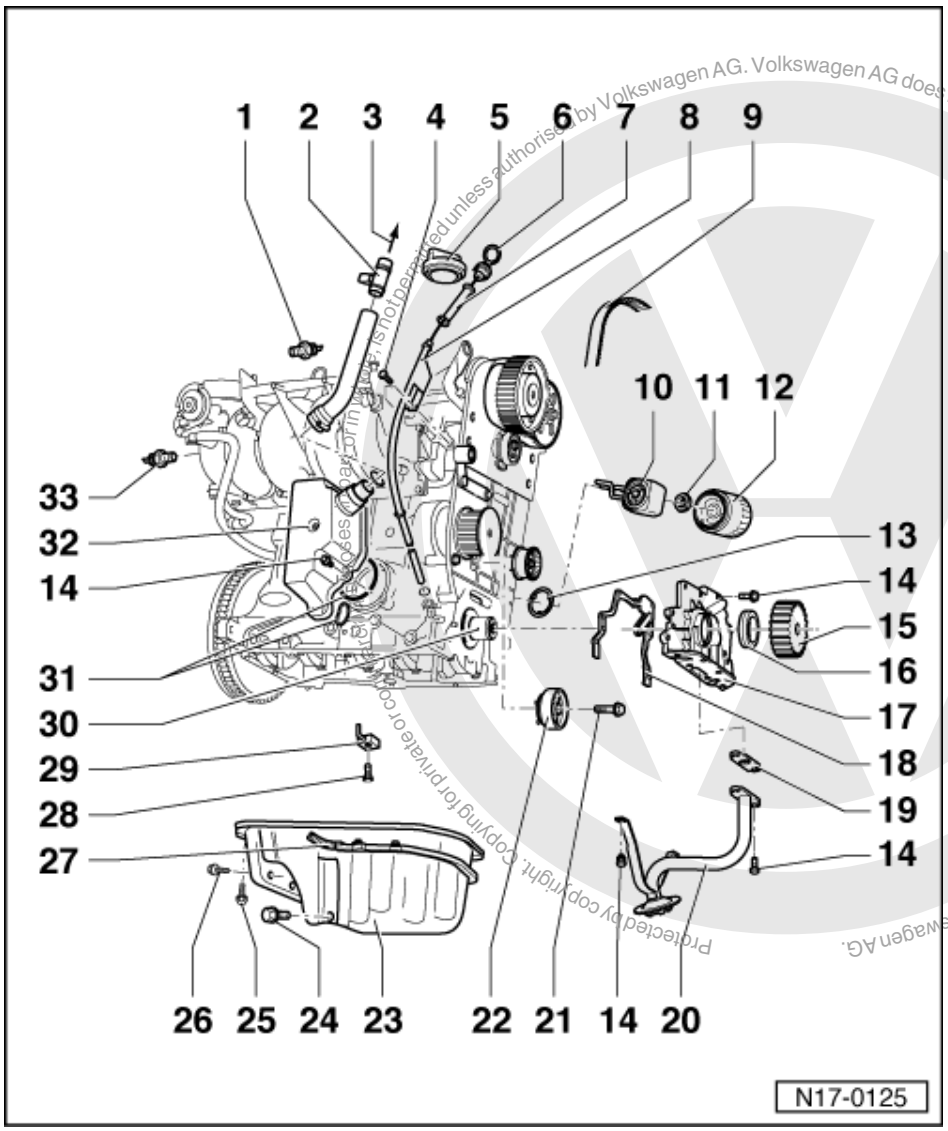

11 25 Nm

12 Oil filter

- Loosen at hexagon bolt head
- Tighten by hand
- Observe installation instructions on oil filter

13 O-ring

- Insert in oil cooler before installing oil cooler
- Renew
- Oil before installing

14 10 Nm

15 Crankshaft toothed belt sprocket

16 Oil seal

- Renewing => Page 28

Protected by copyright. Copying for private or commercial purposes, in any form or by any means, is not permitted unless authorised by Volkswagen AG. Volkswagen AG does not guarantee or accept any liability with respect to the correctness of information in this document. Copyright by Volkswagen AG.
satelettronica

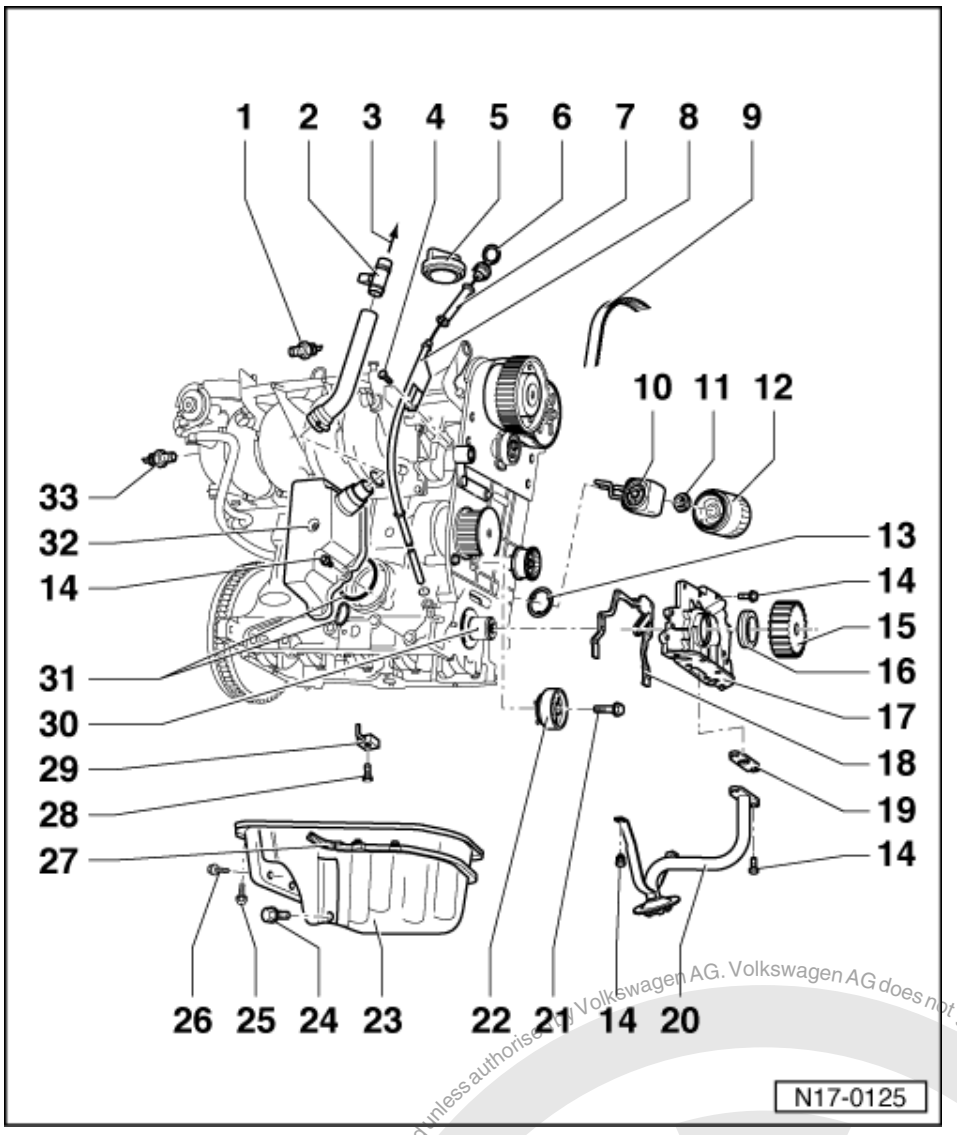

17 Oil pump
- When installing note follower on crankshaft => Page 111 , item 30
- Must be located on dowel sleeves
- Removing and installing => Page 114

18 Gasket
- Renew
- Must be located on dowel sleeves

19 Gasket
- Renew

20 Suction pipe

21 20 Nm
- Loosen and tighten with Torx bit from V.A.G 1766

22 Main drive tensioning roller
- Checking => Page 53
- Tensioning toothed belts => Page 58

Protected by copyright. Copying for private or commercial purposes, in part or in whole, is not permitted unless authorised by Volkswagen AG. Volkswagen AG does not guarantee or accept any liability with respect to the correctness of information in this document. Copyright by Volkswagen AG.
satelettronica

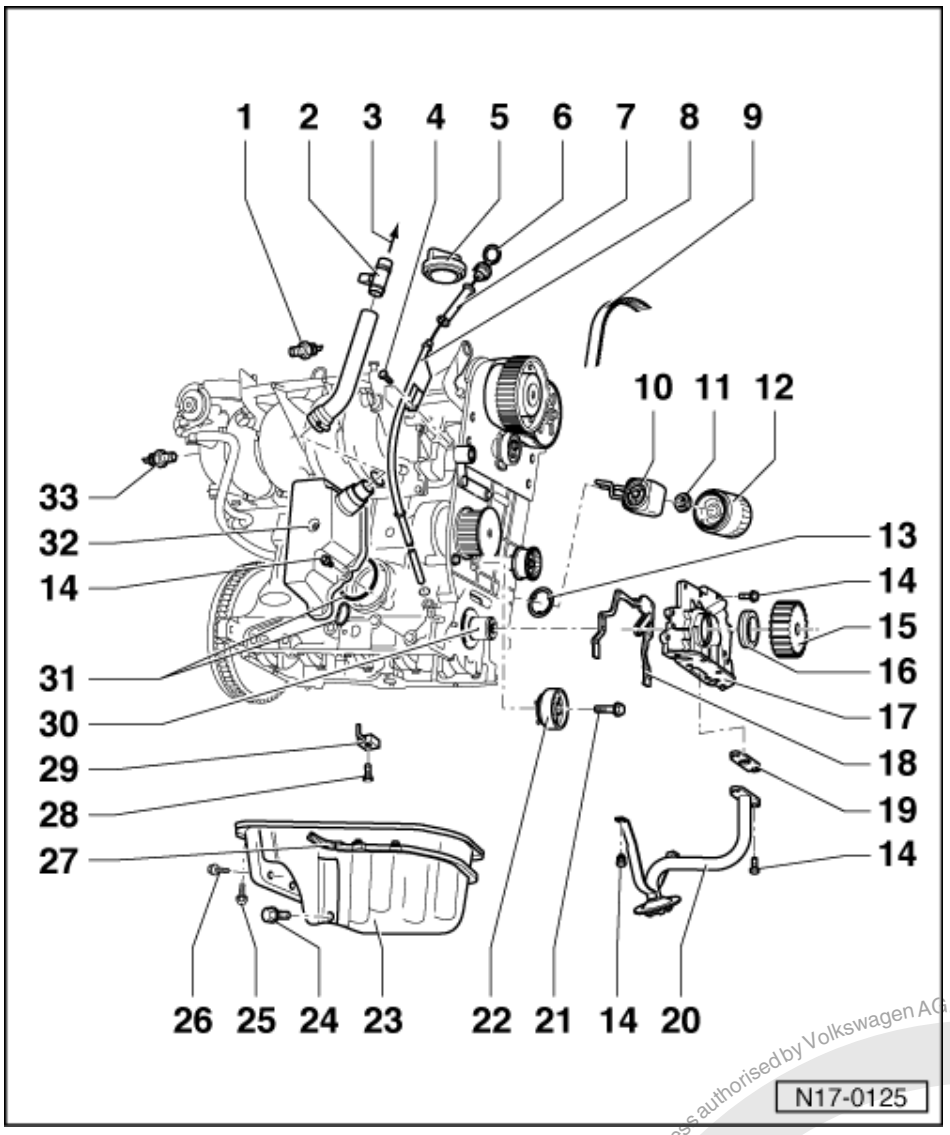

23 Sump

- Removing and installing
  => Page 112
- Clean sealing surface before installing
- Install with silicone sealant
  D 176 404 A2
  => Page 112

24 Oil drain plug, 30 Nm

- With attached seal
- Renew

25 13 Nm

- Renew
- Loosen and tighten only bolts on flywheel end with socket insert T10058

26 45 Nm

27 Cable guide

Protected by copyright. Copying for private or commercial purposes, in part or in whole, is not permitted unless authorised by Volkswagen AG. Volkswagen AG does not guarantee or accept any liability with respect to the correctness of information in this document. Copyright by Volkswagen AG.
satelettronica

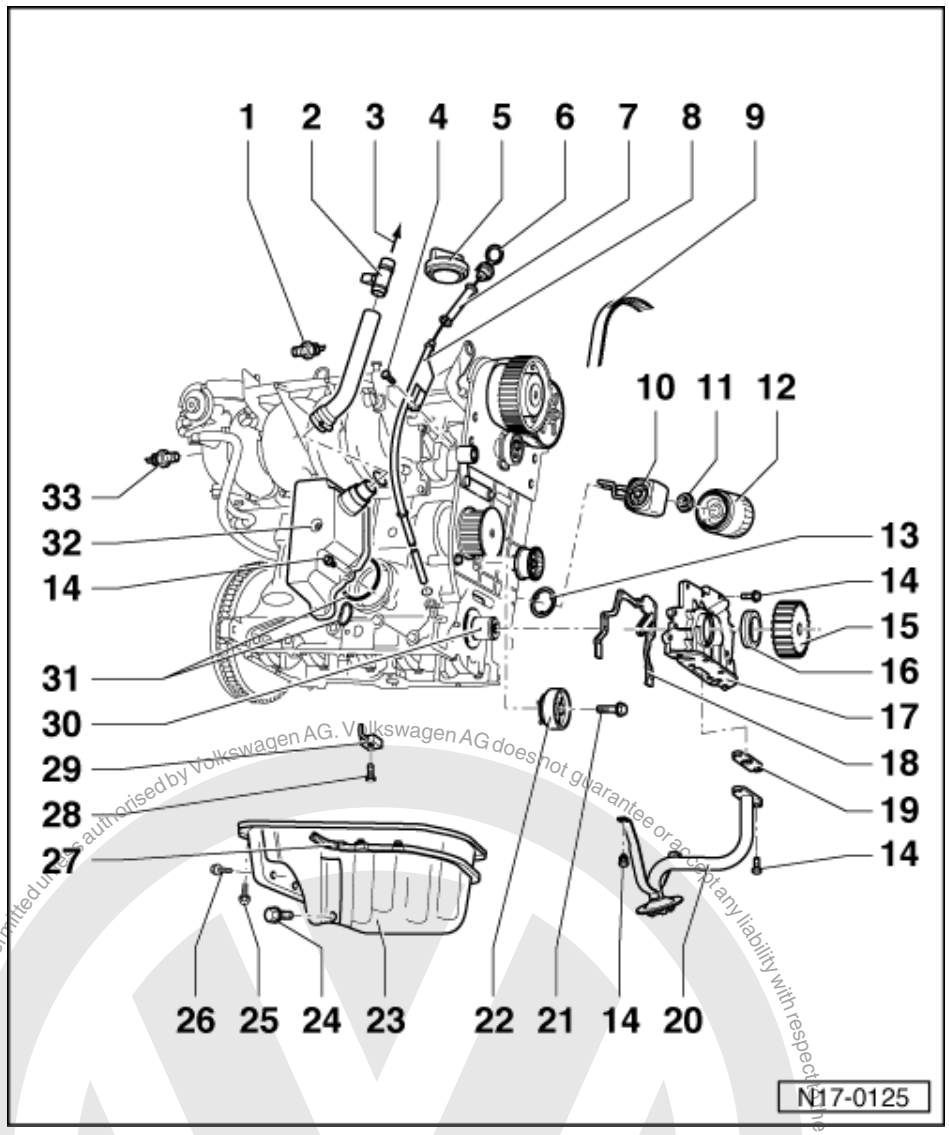

28 25 Nm

29 Oil spray jet

- For piston cooling

30 Driver

- Coat with oil before installing oil pump

31 O-ring

- Renew

32 Oil separator

33 Engine oil temperature sender, 10 Nm

Protected by copyright. Copying for private or commercial purposes, in part or in whole, is not permitted unless authorised by Volkswagen AG. Volkswagen AG does not guarantee or accept any liability with respect to the correctness of information in this document. Copyright by Volkswagen AG.
satelettronica

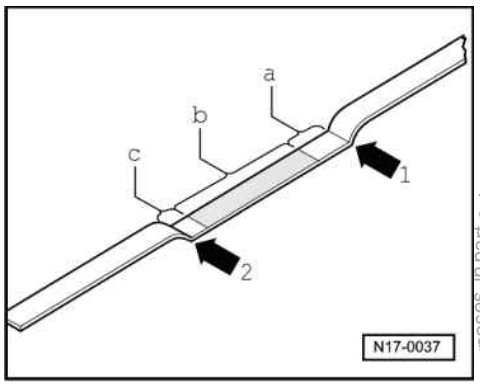

-> Fig. 1 Markings on oil dipstick

1 - max. mark
2 - min. mark
a - Area above hatched field up to max. mark: Do not replenish with engine oil!
b - Oil level within hatched field: can be replenished with engine oil
c - Area from min. mark up to hatched field: replenish with max. 0.5 ltr. of engine oil!

1.2 - Removing and installing oil sump

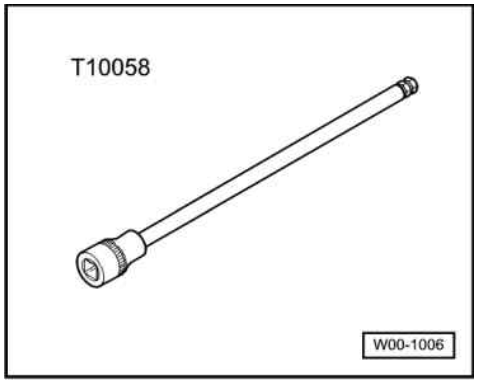

Special tools, workshop equipment, testers, measuring instruments and auxiliary items required

- T10058 Key

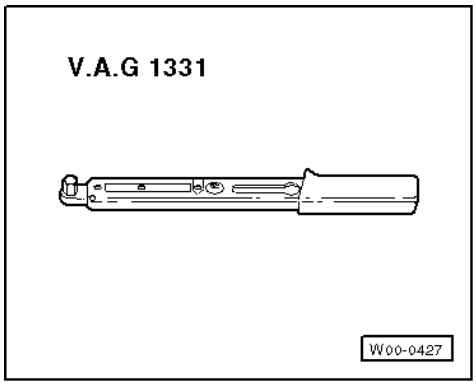

- V.A.G 1331 Torque wrench (5...50 Nm)
- Hand drill with plastic brush
- Flat scraper
- Silicone sealant D176404 A2

Protected by copyright. Copying for private or commercial purposes, in part or in whole, is not permitted unless authorised by Volkswagen AG. Volkswagen AG does not guarantee or accept any liability with respect to the correctness of information in this document. Copyright by Volkswagen AG.
satelettronica

Work sequence

- Remove noise insulation tray.
- Drain engine oil.
- Remove front exhaust pipe from exhaust manifold.
- Remove the two connecting bolts from gearbox bell housing to sump support.
- Unbolt sump sealed with liquid gasket.
- Remove sump, it may be necessary to release sump by tapping lightly with a rubber head hammer.
- Remove sealant residue on cylinder block with a flat scraper.

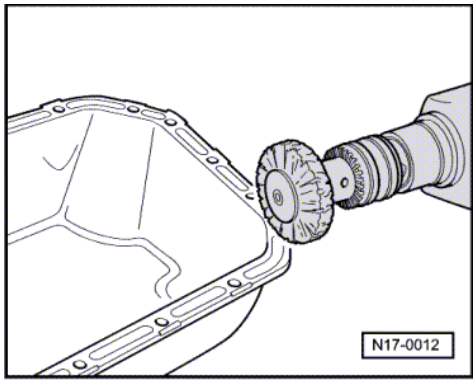

- -> Remove sealant residue on the sump with a rotating brush, e.g. a hand drill with a plastic brush (wear eye protection).
- Clean sealing surface, must be free of oil and grease.

Installing

Notes:

- Note the use by date of the sealant.
- Sump must be installed within 5 minutes of applying silicone sealing compound.

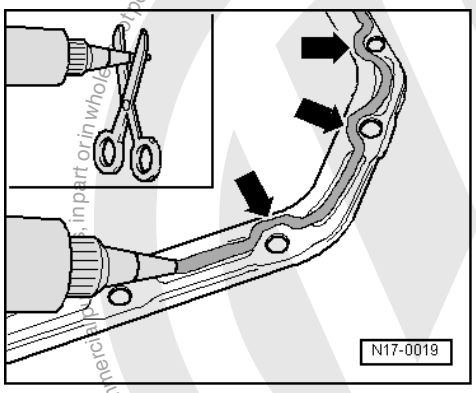

- -> Cut off tube nozzle at forward marking (nozzle approx. 3 mm ø).
- Apply silicone sealing compound, as shown, to clean sump sealing surface. Sealing compound bead must be.
  - 2...3 mm thick.
  - and run on inside of bolt holes -arrows-.

Note:

The sealing compound bead must not be thicker, otherwise excessive sealing compound will enter the sump and may block the oil suction pipe strainer.

- Install sump immediately and tighten all sump bolts lightly.
- Tighten sump bolts to
  13 Nm.
- Tighten sump/gearbox bolts to 45 Nm.

Copyright. Copying or reproduction in part or in whole is permitted only unless authorised by Volkswagen AG. Volkswagen AG does not guarantee or accept any liability with respect to the correctness of information in this document. Copyright by Volkswagen AG.
satelettronica

Note:

After installing sump the sealant must be allowed to dry for approx. 30 minutes before engine oil is replenished.

1.3 - Removing and installing oil pump

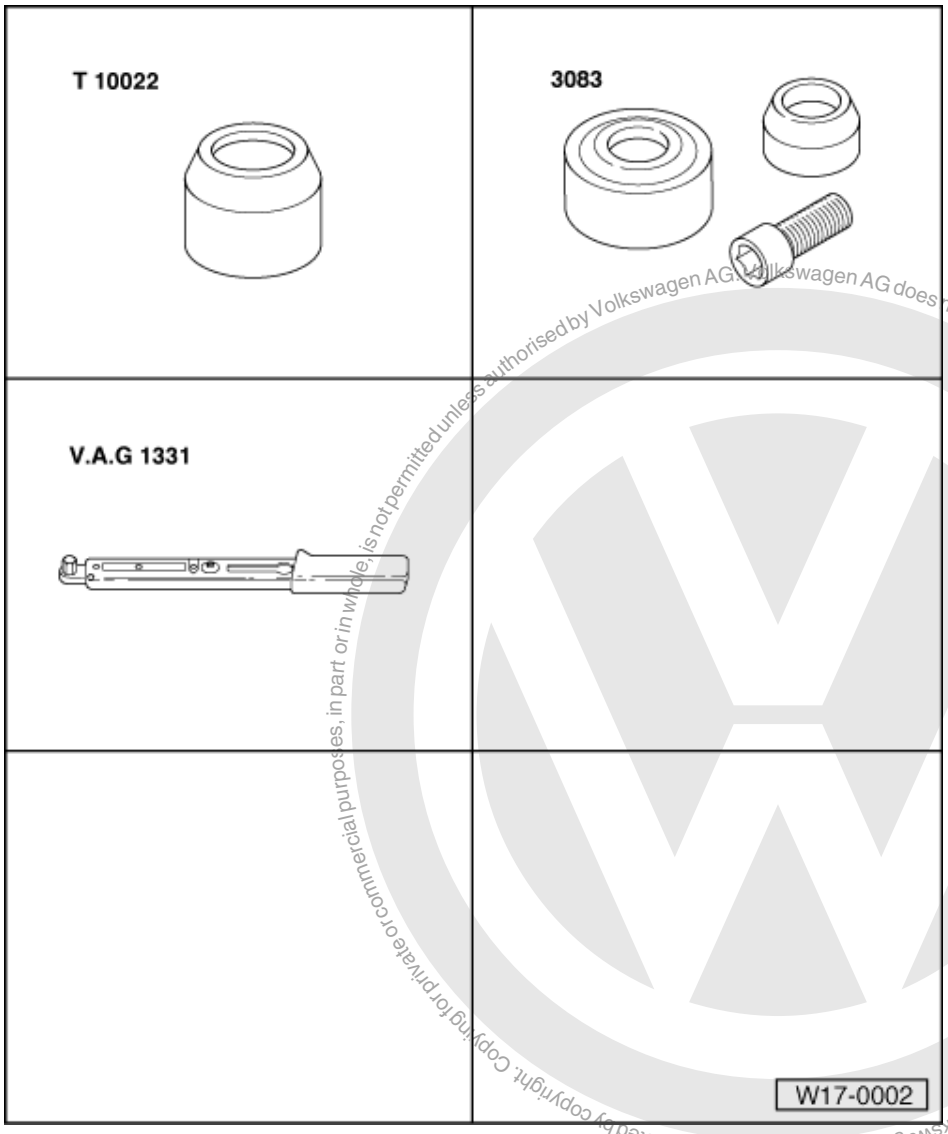

Protected by copyright. Copying for private or commercial purposes, in part or in whole, is not permitted unless authorised by Volkswagen AG. Volkswagen AG does not guarantee or accept any liability with respect to the correctness of information in this document. Copyright by Volkswagen AG.

satelettronica

Special tools, workshop equipment, test and measuring appliances and auxiliary items required

- T10022 Sleeve
- 3083 Oil seal fitting tool
- V.A.G 1331 Torque wrench (5...50 Nm)

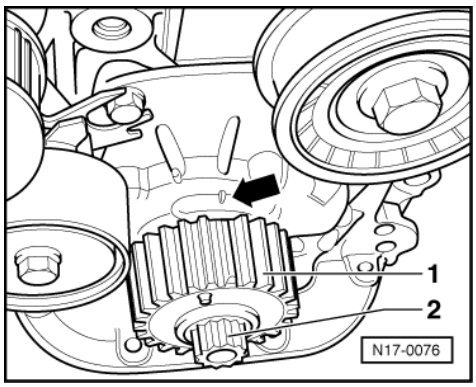

Removing

- Remove main drive toothed belt => Page 58 ; Removing, installing and tensioning toothed belt.
- -> Secure crankshaft toothed belt sprocket -1- to crankshaft with old securing screw -2-.
- Position crankshaft at TDC No. 1 cylinder:

  The tooth ground down on the toothed belt sprocket must align with mark on the oil pump -arrow-.

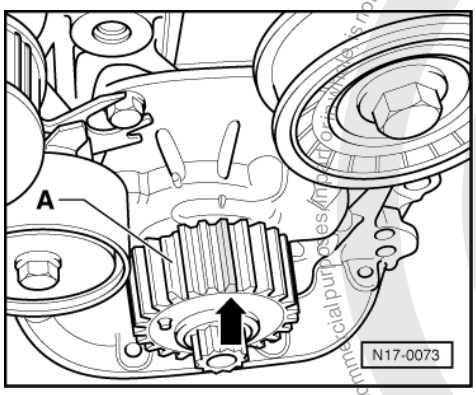

- -> Turn crankshaft/toothed belt sprocket three teeth anti-clockwise away from TDC:

  The third tooth -arrow- to the right of the tooth ground down -A- on the toothed belt sprocket must align with TDC mark on the oil pump housing.

Note:

This procedure moves the crankshaft to the correct installation position for the oil pump. One of the polygon cams on the crankshaft is uppermost.

- Remove main drive tensioning roller.
- Remove sump => Page 112 .
- Remove suction pipe => Page 109 , item 20 .
- Remove crankshaft toothed belt sprocket.
- Remove oil pump.
- Remove gasket.
- Remove sealant remnants on cylinder block with a flat scraper.
- Clean sealing surfaces, they must be oil and grease free.

Protected by copyright. Copyright by Volkswagen AG.
Copyright by Volkswagen AG. Volkswagen AG does not guarantee or accept any liability with respect to the correctness of information in this document.
Copyright by Volkswagen AG. Volkswagen AG does not permit third parties to use this document for commercial purposes.
satelettronica

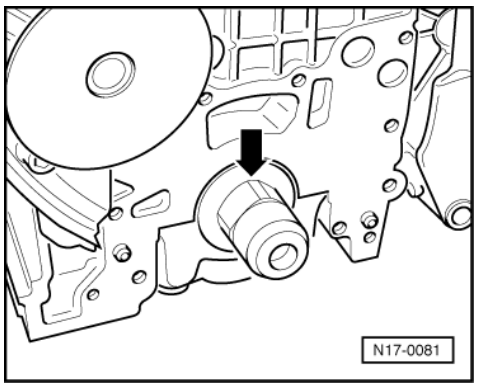

Installing

Conditions

- -> One of the polygon cams -arrow- on the crankshaft is uppermost.

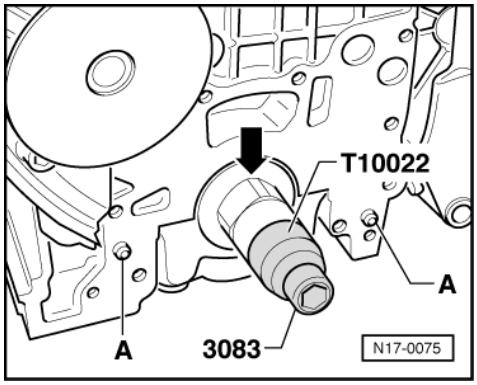

Work sequence

- -> Fit sleeve T10022 and hexagon socket head bolt from 3083 onto crankshaft and tighten hand tight.
- Fit new gasket onto guide pins -A-.

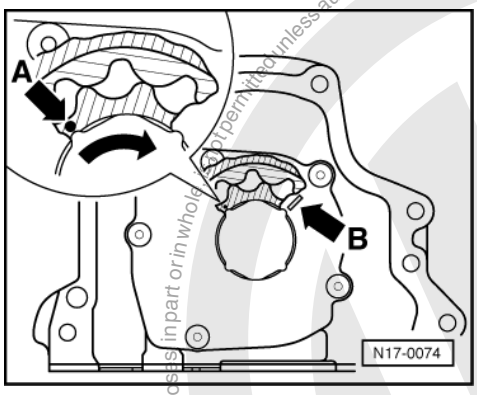

- -> Position one of the oil pump inner rotor markings arrow -A- on installation position mark arrow -B- on oil pump housing cover.
- Coat the four crankshaft polygon cams with oil.
- Lightly oil sealing lip of oil pump oil seal.
- Guide oil pump carefully onto crankshaft polygon cams.
- Align inner rotor to crankshaft polygon cams by turning slightly if necessary.
- Then slide oil pump carefully onto guide pins.
- Secure oil pump with new bolts.
  Tightening torque: 10 Nm
- Remove sleeve T10022.
- Install suction pipe => Page 109 , item 20 .
- Install sump => Page 112 .

Protected by copyright. Copyright by Volkswagen AG. Volkswagen AG does not guarantee or accept any liability with respect to the correctness of information in this document. Copyright by Volkswagen AG. Reproduction in part or in whole is not permitted unless authorised by Volkswagen AG.
satelettronica

- Install main drive tensioning roller, install toothed belt and tension => Page 58 , Removing, installing and tensioning toothed belt.

1.4 - Checking oil pressure and oil pressure switch

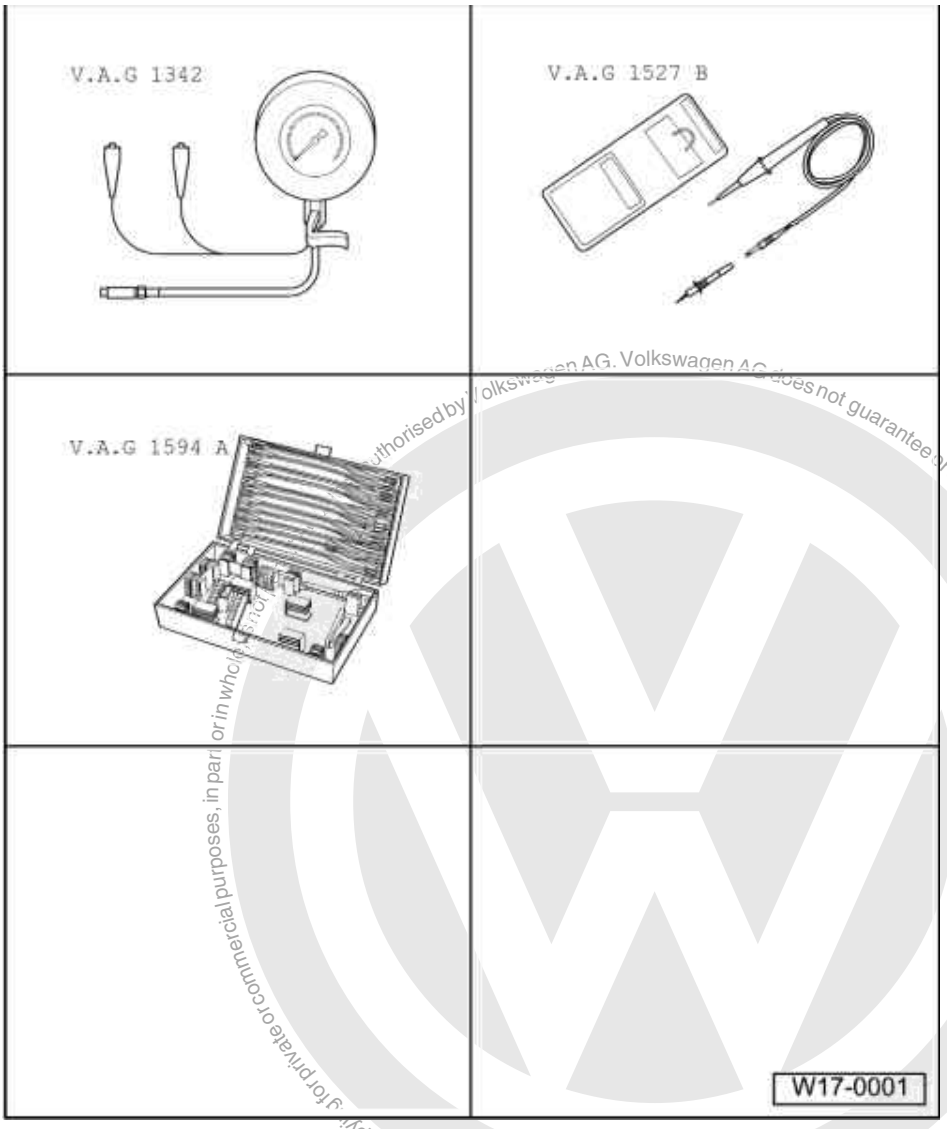

Protected by copyright. Copying for private or commercial purposes, in part or in whole, is not authorised by Volkswagen AG. Volkswagen AG does not guarantee or accept any liability with respect to the correctness of information in this document. Copyright by Volkswagen AG.

Special tools, workshop equipment, test and measuring appliances and auxiliary items required

- V.A.G 1342 Oil pressure tester
- V.A.G 1527 B Diode test lamp
- V.A.G 1594 A Adapter set

Note:

Functional check and servicing the optical and acoustic oil pressure warning:

=> Current flow diagrams, Electrical fault finding and Fitting locations binder

satelettronica

Test sequence

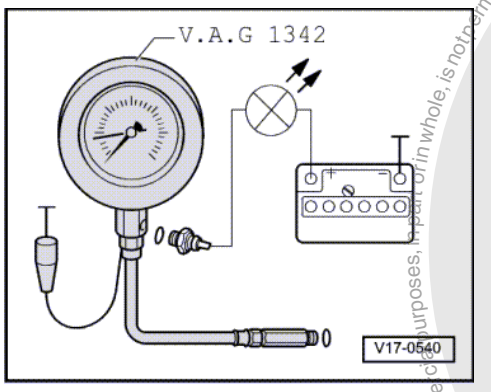

- -> Remove oil pressure switch (F1) and screw into tester.

- Screw tester into the cylinder head in place of the oil pressure switch.
- Connect brown wire of tester to earth (-).
- Connect diode test lamp V.A.G 1527 B using aux. cables from V.A.G 1594 A to battery positive (+) and oil pressure switch.
- Start engine and increase speed slowly.
  At
  0.3...0.7 bar
  the LED must light up, otherwise renew oil pressure switch.
- Increase engine speed further.
  At 2000 rpm and an oil temperature of 80 °C the oil pressure should be at least 2.0 bar.

At higher engine speed the oil pressure must not exceed 7.0 bar.

Protected by copyright. Copying for private or commercial purposes, in part or in whole, is not permitted unless authorised by Volkswagen AG. Volkswagen AG does not guarantee or accept any liability with respect to the correctness of information in this document. Copyright by Volkswagen AG.
satelettronica

19 - Cooling system

Protected by copyright. Copyright by Volkswagen AG. Volkswagen AG does not guarantee or accept any liability with respect to the correctness of information in this document. Copyright by Volkswagen AG. Reproduction, in whole or in part, is not permitted unless authorised by Volkswagen AG for commercial purposes or publication.

1 - Removing and installing parts of cooling system

1.1 - Removing and installing parts of cooling system

Notes:

- When the engine is warm the cooling system is under pressure. If necessary release pressure before commencing repair work.
- Hoses are secured with spring-type clips. In cases of repair only use spring-type clips.
- Assembly tool VAS 5024 or hose clip pliers V.A.G 1921 are recommended for fitting spring-type clips.
- When installing coolant hoses route stress-free, so that they do not come into contact with other components (observe markings on coolant connection and hose).

Perform leak test of cooling system using cooling system tester V.A.G 1274 and adapters V.A.G 1274/3 and V.A.G 1274/4.

Parts of cooling system body side =>Page 120 .

Parts of cooling system engine side => 123 .

Coolant hose connection diagram =>Page 128 .

Draining and filling with coolant=> Page 129 .

Coolant mixture ratios => Page 129 , draining and filling with coolant

satelettronica

1.2 - Parts of cooling system body side

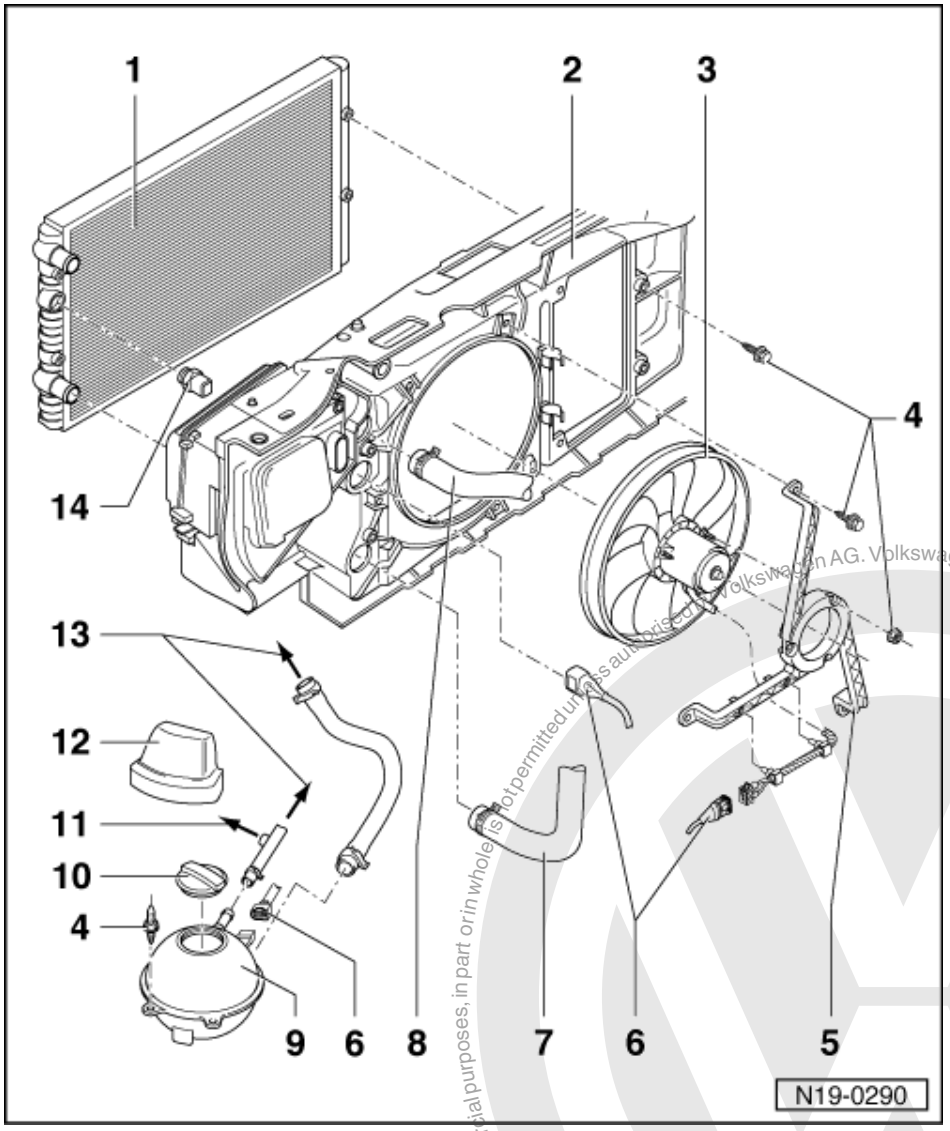

1 Radiator
- Removing and installing =>Page 131
- After replacing renew entire coolant

2 Lock carrier

3 Radiator fan (V7)

4 10 Nm

5 Bracket
- For electric fan

6 Connector

7 Bottom coolant hose
- Coolant hose connection diagram =>Page 128

Protected by copyright. Copying for private or commercial purposes, in part or in whole, is not permitted unless authorised by Volkswagen AG. Volkswagen AG does not guarantee or accept any liability with respect to the correctness of information in this document. Copyright by Volkswagen AG.
satelettronica

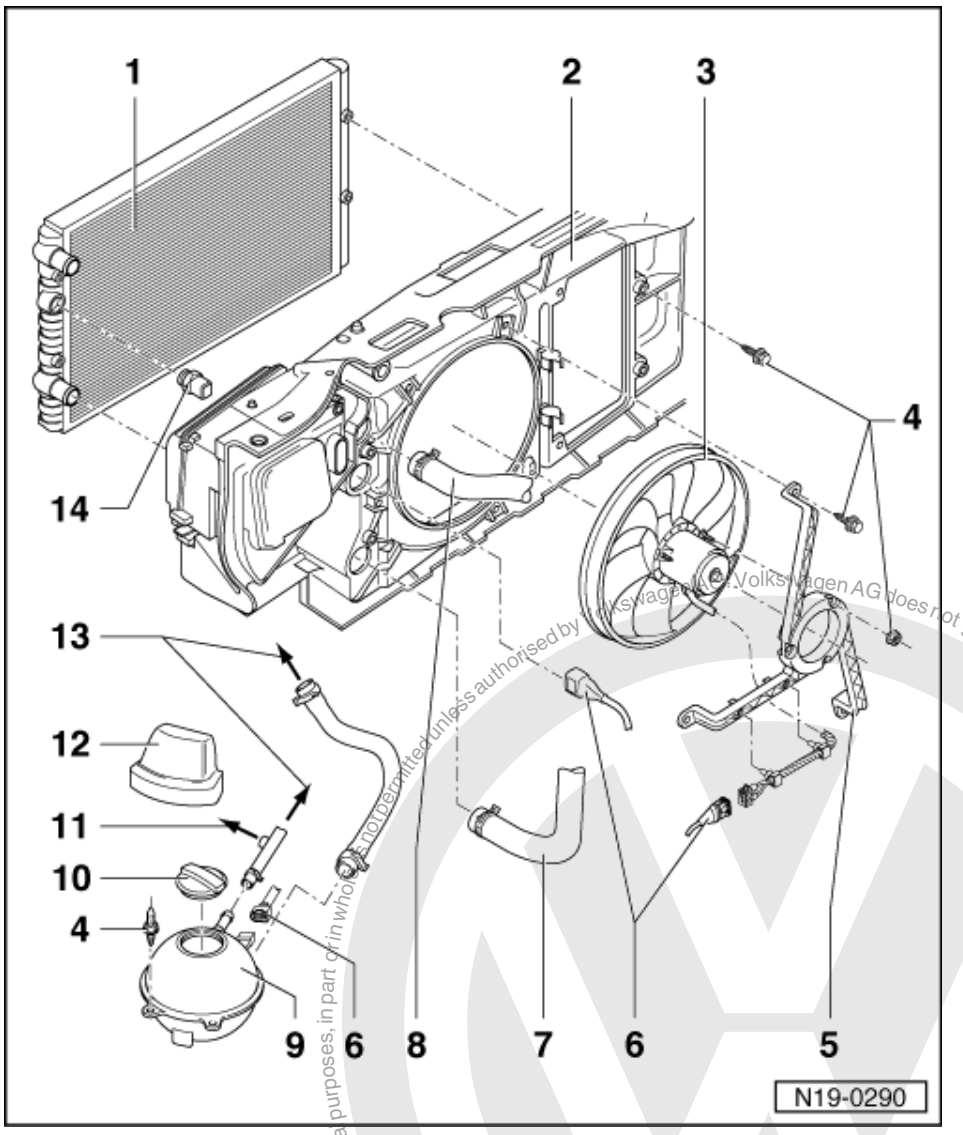

8 Top coolant hose
- Coolant hose connection diagram =>Page 128

9 Expansion tank
- Perform leak test of cooling system using cooling system tester V.A.G 1274 and adapter V.A.G1274/3

10 Cap
- Check with V.A.G 1274 and 1274/4
- Test pressure 1.4...1.6 bar

11 To throttle valve control part

12 Cover

13 To thermostat housing
- Coolant hose connection diagram =>Page 128

Protected by copyright. Copying for private or commercial purposes, in part or in whole, is not permitted unless authorised by Volkswagen AG. Volkswagen AG does not guarantee or accept any liability with respect to the correctness of information in this document. Copyright by Volkswagen AG.
satelettronica

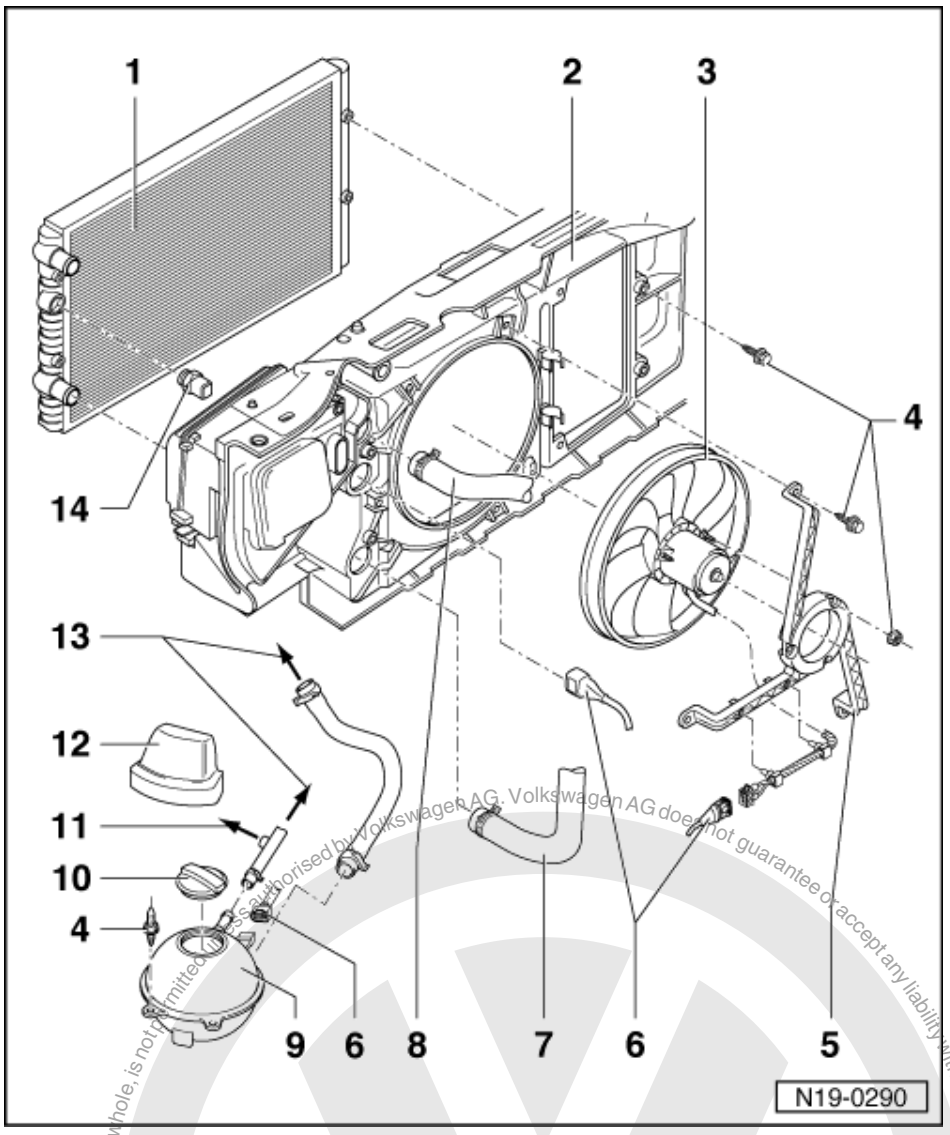

14 Thermo-switch (F18), 35 Nm

- For electric fan
- Switching temperatures:
  Stage 1
  on: 92...97 °C
  off: 84...91 °C
  Stage 2
  on: 99...105 °C
  off: 91...98 °C

Protected by copyright. Copying for private or commercial purposes, in whole or in part, is not permitted unless authorised by Volkswagen AG. Volkswagen AG does not guarantee or accept any liability with respect to the correctness of information in this document. Copyright by Volkswagen AG.

satelettronica

1.3 - Parts of cooling system engine side

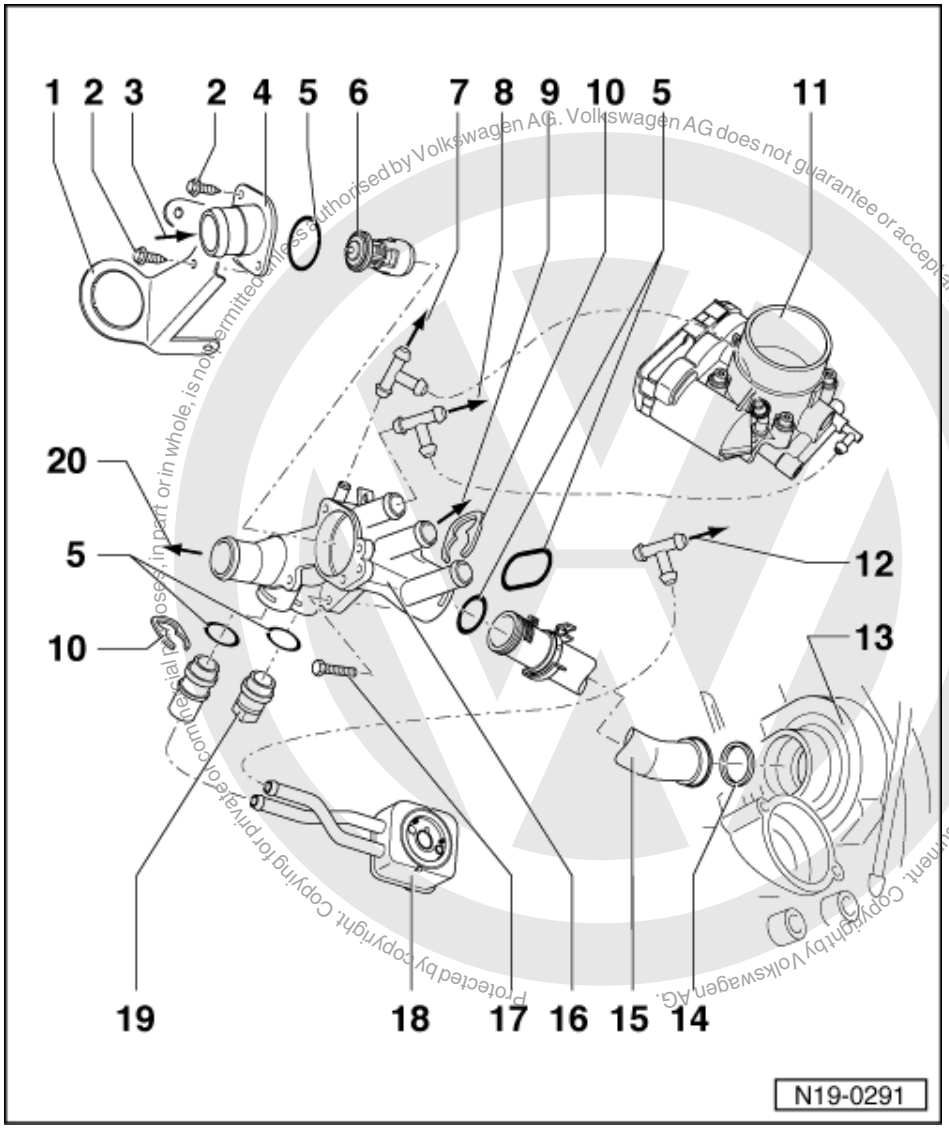

Protected by copyright. Copying for private or commercial purposes, in part or in whole, is not permitted unless authorised by Volkswagen AG. Volkswagen AG does not guarantee or accept any liability with respect to the correctness of information in this document. Copyright by Volkswagen AG.

satelettronica

Thermostat side

1 Retainer
2 Self-tapping bolt
3 From bottom of radiator
- =>Page 120 , item 7

4 Connection
5 O-ring
- Renew

6 Coolant thermostat
- Checking operation: heat-up thermostat in water the thermo element pin must move out

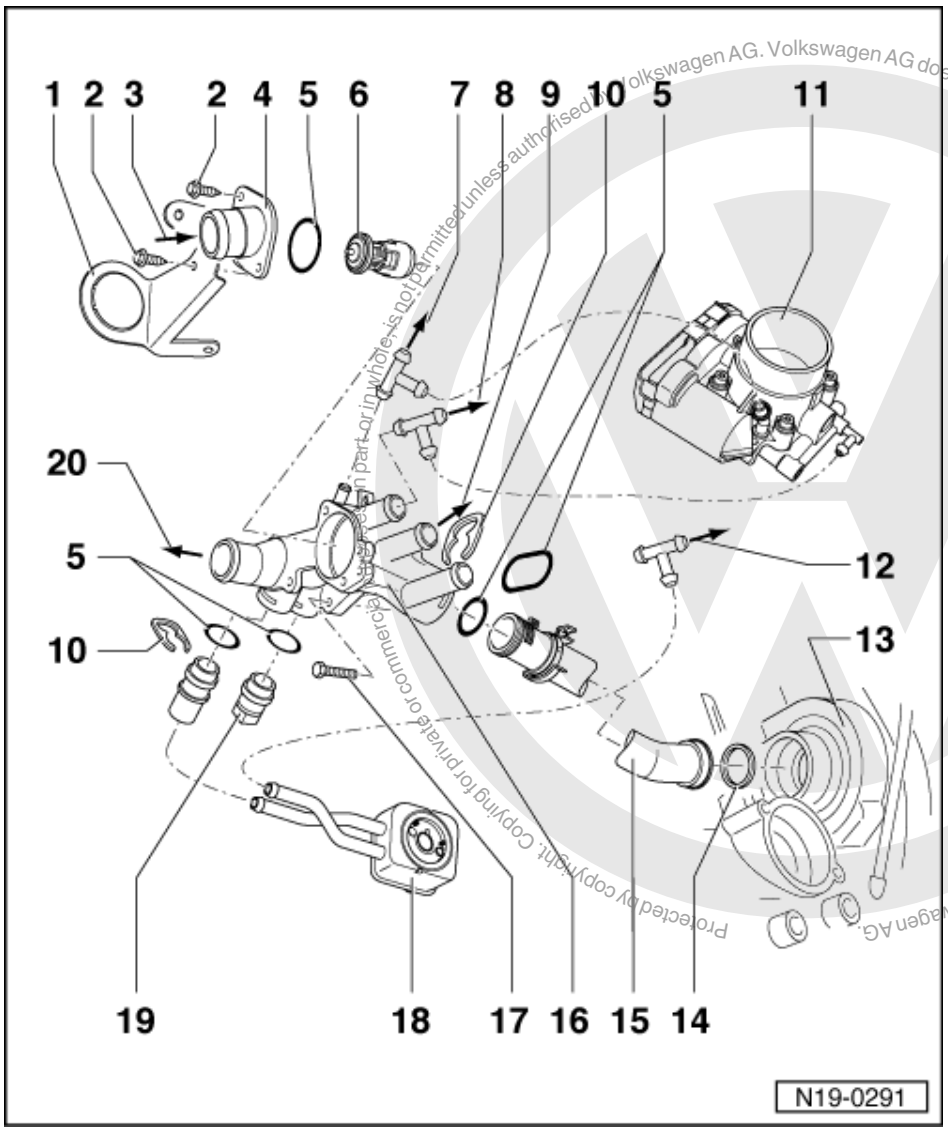

Protected by copyright. Copying for private or commercial purposes, in part or in whole, is not permitted unless authorised by Volkswagen AG. Volkswagen AG does not guarantee or accept any liability with respect to the correctness of information in this document. Copyright by Volkswagen AG.

satelettronica

7 To top of expansion tank
8 To heat exchanger
9 From bottom of expansion tank
10 Retaining clip
11 Throttle valve control part
- Heated by coolant

12 From heat exchanger
13 Coolant pump housing on cylinder block
14 Seal
- Renew

15 Coolant pipe
16 Thermostat housing

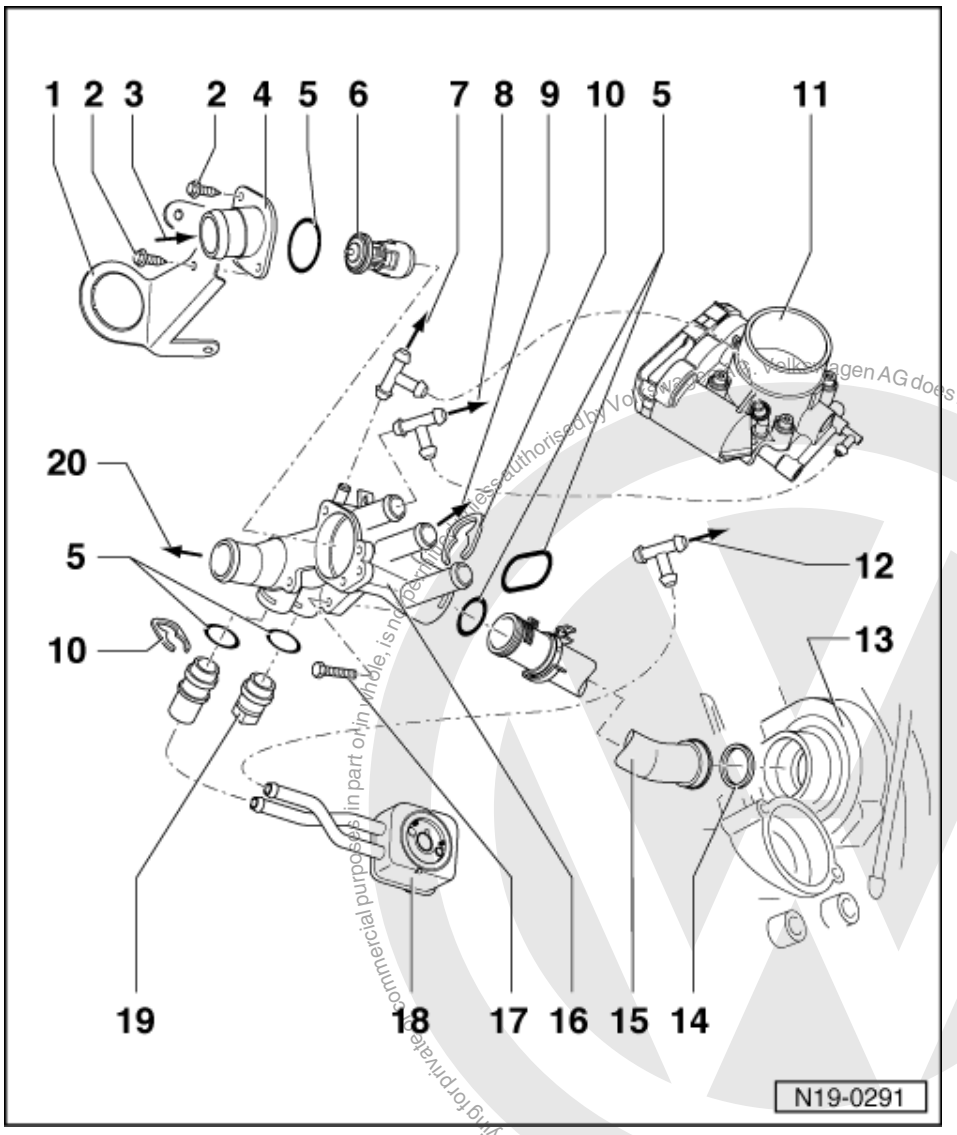

17 10 Nm

18 Oil cooler

- Removing and installing
  =>Page 107 , item 10

19 Coolant temperature sender (G62)

- With coolant temperature gauge sender (G2)

20 To top of radiator

- =>Page 121 , item 8

Protected by copyright. Copyright for private or commercial purposes, in part or in whole, is not permitted unless authorised by Volkswagen AG. Volkswagen AG does not guarantee or accept any liability with respect to the correctness of information in this document. Copyright by Volkswagen AG.
satelettronica

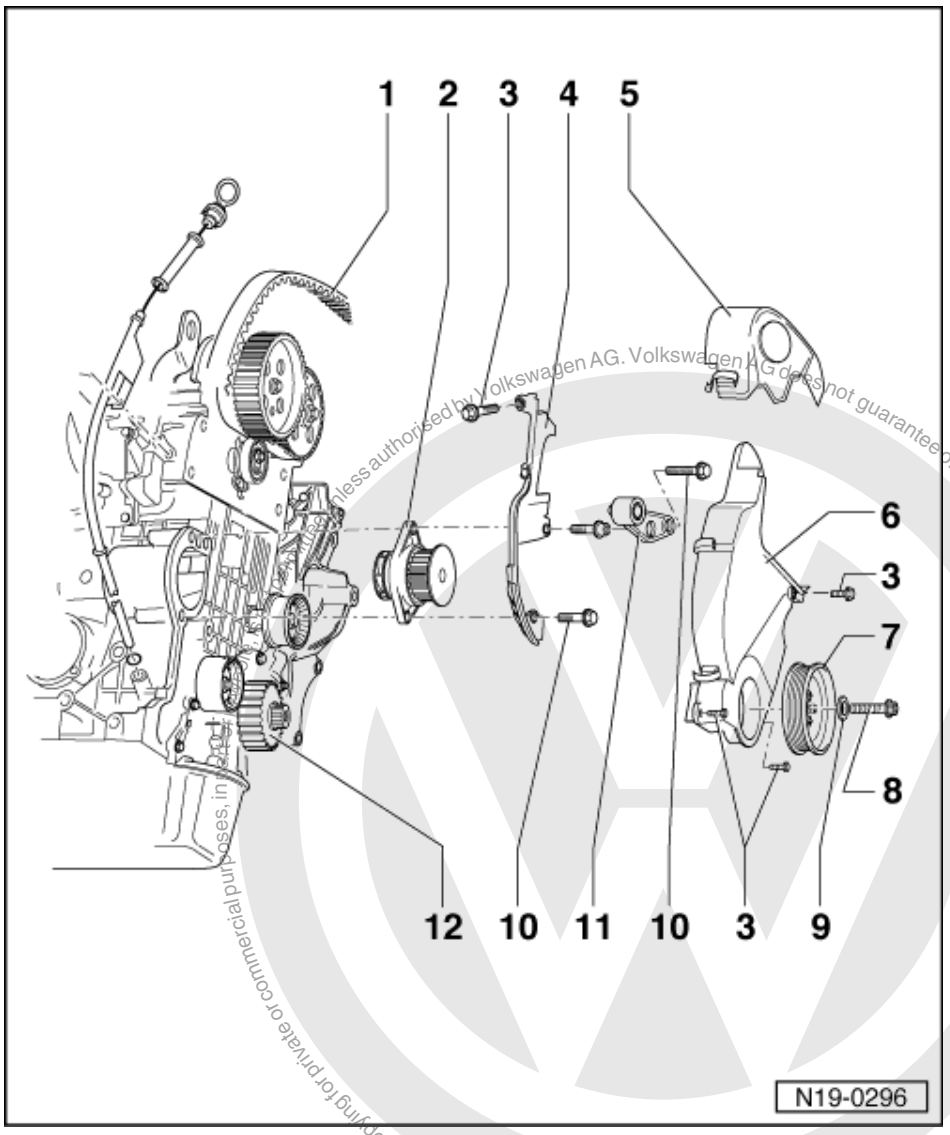

Protected by copyright. Copying for private or commercial purposes, in part or in whole is not permitted unless authorised by Volkswagen AG. Volkswagen AG does not guarantee or accept any liability with respect to the correctness of information in this document. Copyright by Volkswagen AG.

satelettronica

Coolant pump side

1 Main drive toothed belt
- Mark D.O.R. before removing
- Check for wear
- Do not kink
- Removing, installing and tensioning
  => Page 58

2 Coolant pump
- With integrated seal
- Seal must not be separated from coolant pump
- Check for ease of movement
- If damaged or leaking renew complete
- Removing and installing
  => Page 133

3 10 Nm

4 Rear toothed belt guard

5 Toothed belt guard - upper part

6 Toothed belt guard - lower part

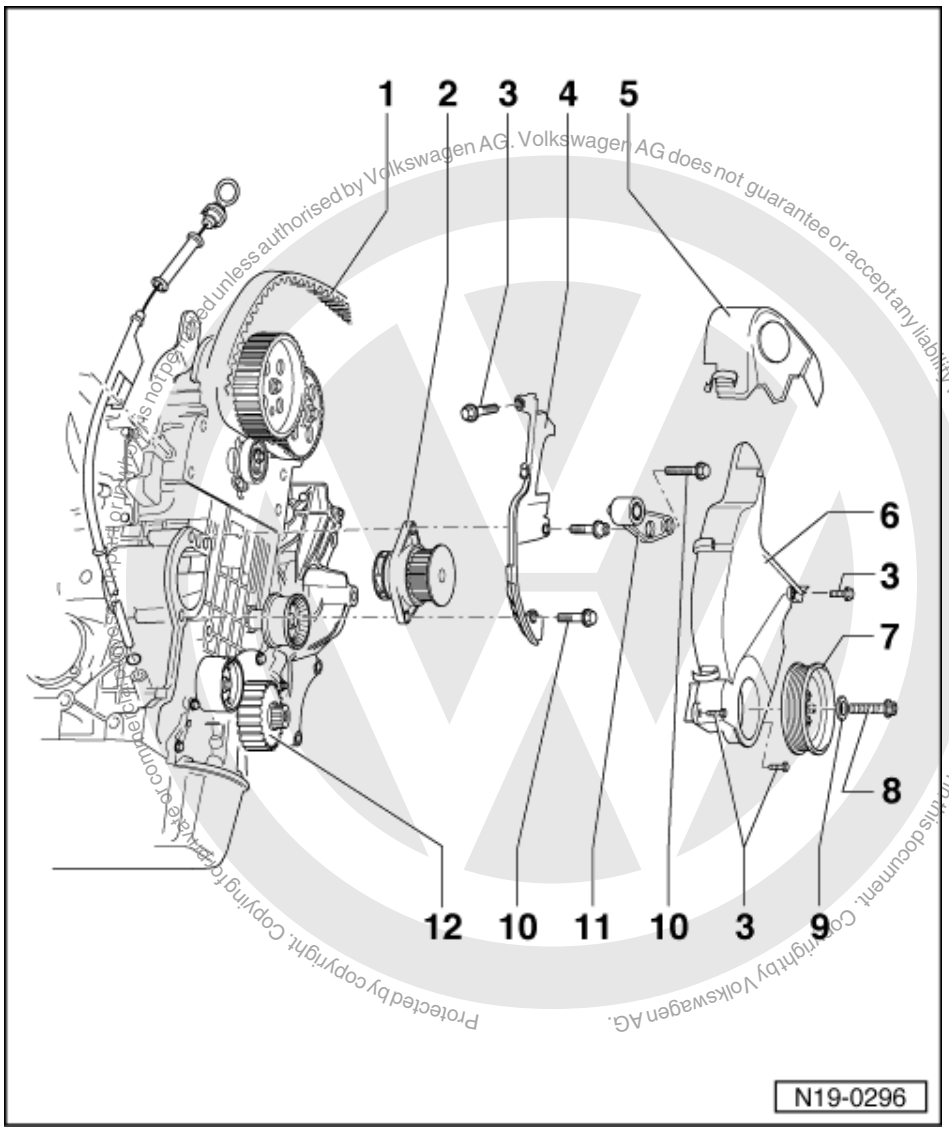

7 Belt pulley
- When installing note fixing arrangement
- Removing and installing ribbed belt => Page 22

8 90 Nm + 1/4 turn (90 °) further
- Renew
- Oil threads
- The turning further can be done in several stages
- The turning further angle can be checked with a commercial protractor e.g. Hazet 6690

9 Washer
- Renew

10 20 Nm

11 Main drive toothed belt idler roller

12 Crankshaft toothed belt sprocket

satelettronica

1.4 - Coolant hose connection diagram

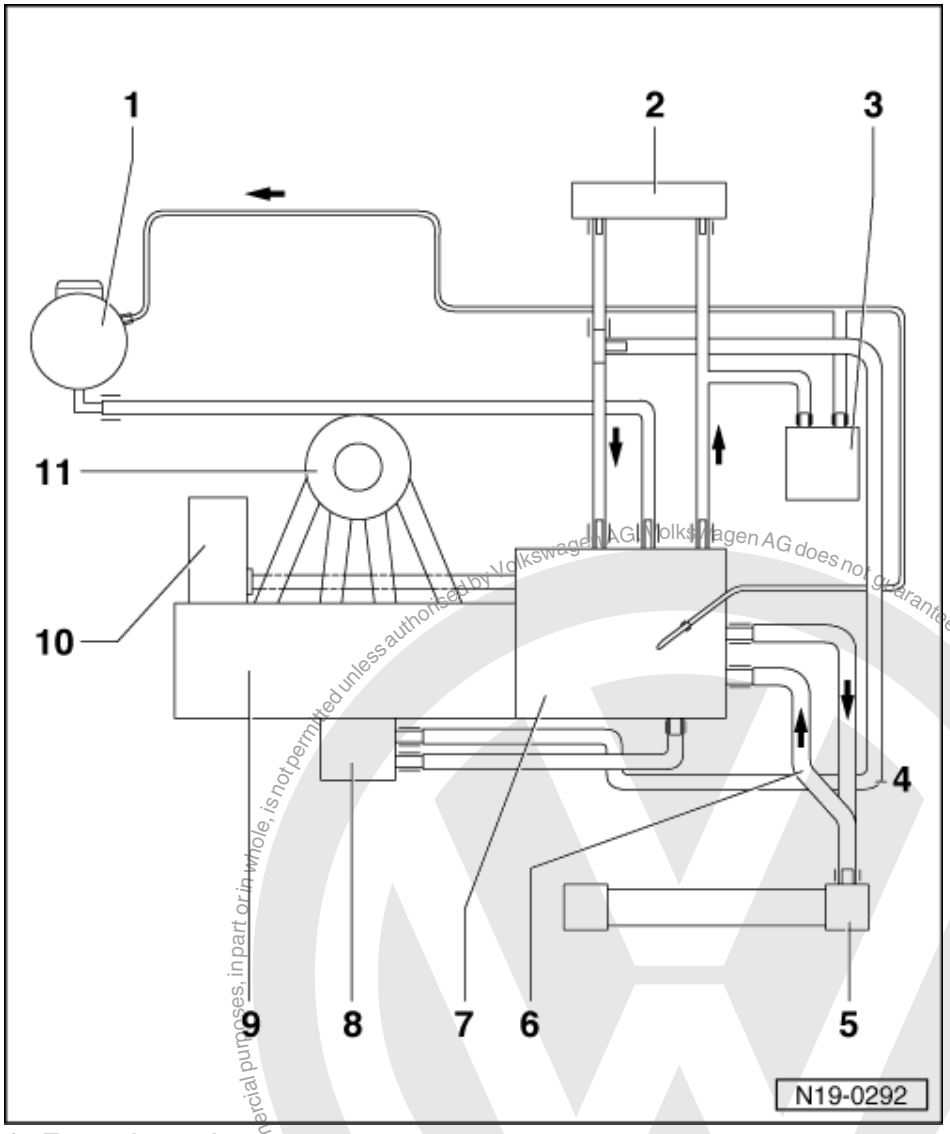

1 Expansion tank
2 Heating system heat exchanger
3 Throttle valve control part
4 Lower coolant hose
5 Radiator
6 Upper coolant hose
7 Thermostat housing
8 Oil cooler
9 Cylinder block
10 Coolant pump
11 Intake manifold

Protected by copyright. Copying for private or commercial purposes, in part or in whole, is not permitted unless authorised by Volkswagen AG. Volkswagen AG does not guarantee or accept any liability with respect to the correctness of information in this document. Copyright by Volkswagen AG.
satelettronica

1.5 - Draining and filling cooling system

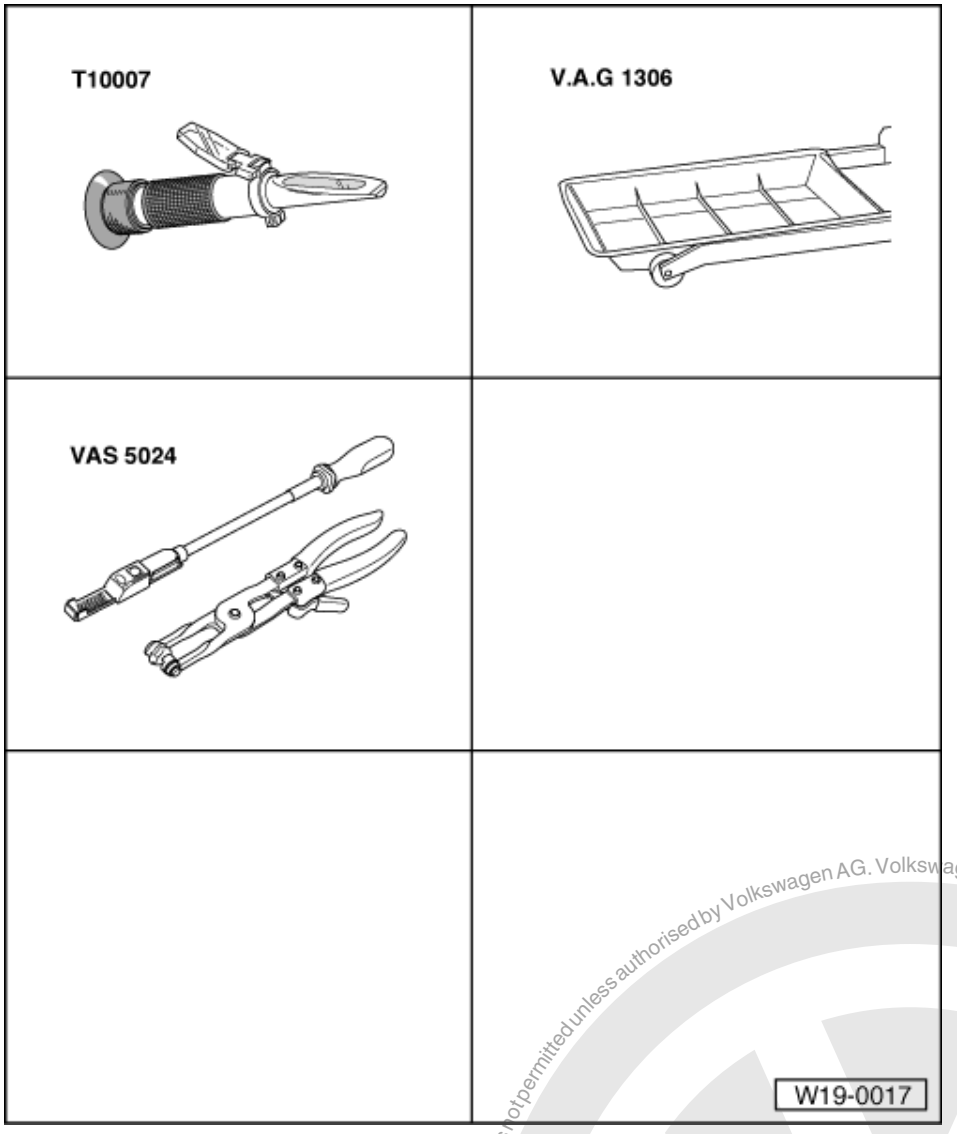

Special tools, workshop equipment, test and measuring appliances and auxiliary items required

- T10007 Refractometer
- V.A.G 1306 Drip tray
- VAS 5024 Assembly tool for spring-type clamps

Draining

- Open cap on coolant expansion tank.

Warning ! Steam can be released when removing the cap from the expansion tank. Cover cap with a cloth and open carefully.

- Drain coolant from bottom radiator hose.
- Pull off lower coolant hose at radiator using assembly tool for spring-type clamps VAS 5024.

Protected by copyright. Copying for private or commercial purposes, in part or in whole, is not permitted unless authorised by Volkswagen AG. Volkswagen AG does not guarantee or accept any liability with respect to the correctness of information in this document. Copyright by Volkswagen AG.
satelettronica

Note:

Observe disposal regulations for coolant!

Filling

Notes:

- Only use coolant additive G 12 in accordance with TL VW 774 F.
  Distinguishing feature: coloured violet
- G 12 violet (in accordance with TL VW 774 F) can be mixed with the previous coolant additive G 12 red!

- G 12 and coolant additives marked "In accordance with TL VW 774 F" prevent frost and corrosion damage, scaling and also raise boiling point of coolant. For this reason the system must be filled all year round with frost and corrosion protection additives.
- Because of its high boiling point, the coolant improves engine reliability under heavy loads, particularly in countries with tropical climates.
- Protection against frost must be assured to about -25 °C (in arctic climatic countries to about -35 °C).
- The coolant concentration must not be reduced by adding water even in warmer seasons and in warmer countries. The anti-freeze ratio must be at least 40 %.
- If for climatic reasons a greater frost protection is required, the amount of G 12 can be increased, but only up to 60 % (frost protection to about -40 °C), as otherwise frost protection is reduced again and cooling effectiveness is also reduced.

- The refractometer T10007 is recommended for determining the current anti-freeze density.
- If radiator, heat exchanger, cylinder head or cylinder head gasket is replaced, do not reuse old coolant.

Recommended mixture ratios:

Frost pro- tection to	Anti-freeze amount	G 121)	Water1)
-25 °C	40 %	2.4 ltr.	3.6 ltr.
-35 °C	50 %	3.0 ltr.	3.0 ltr.

1) The quantity of coolant can vary depending upon the vehicle equipment.

Work sequence

- Secure lower coolant hose on connecting piece of radiator.

With cooling system charging unit VAS 6096

- Fill coolant circuit using cooling system charging unit VAS 6096.

=> Operating instructions for cooling system charging unit VAS 6096

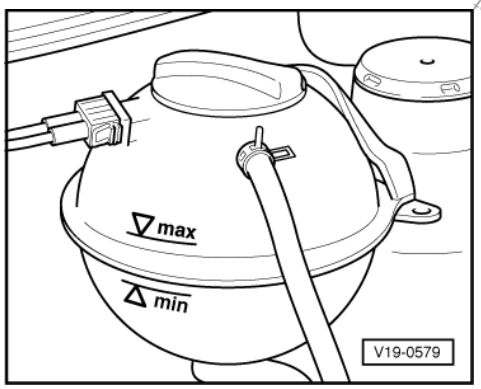

Not using cooling system charging unit VAS 6096

- -> Fill with coolant up to max. mark on expansion tank.

Protected by copyright. Copying for private or commercial purposes, in part or in whole, is not permitted unless authorised by Volkswagen AG. Volkswagen AG does not guarantee or accept any liability with respect to the correctness of information in this document. Copyright by Volkswagen AG.
satelettronica

With and without cooling system charging unit VAS 6096

- Fit expansion tank cap.
- Start engine and maintain an engine speed of about 2000 rpm for approx. 3 minutes.
- Run engine until radiator fan cuts-in.
- Check coolant level and top-up if necessary. When the engine is at normal operating temperature, the coolant level must be on the max. mark and between the min. and max. marks when the engine is cold.

1.6 - Removing and installing radiator

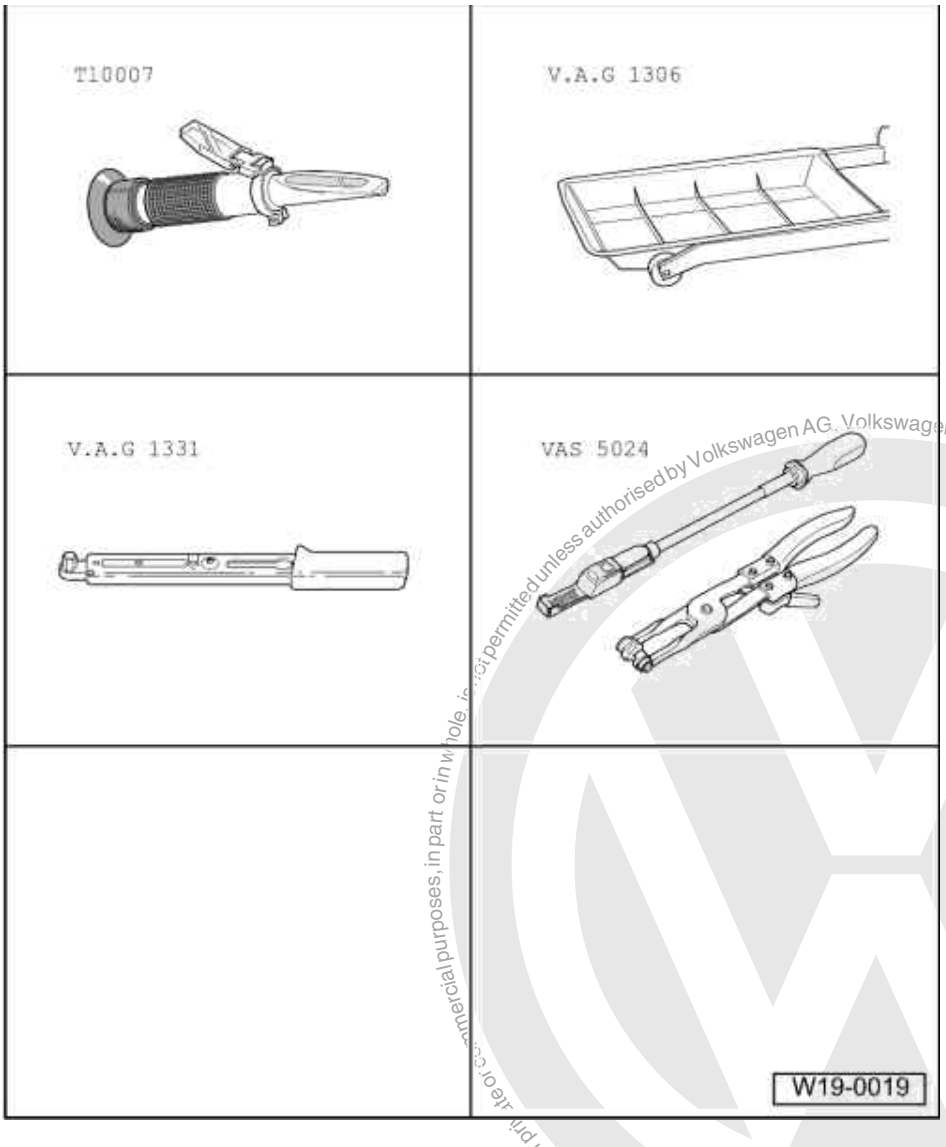

Special tools, workshop equipment, test and measuring appliances and auxiliary items required

- T10007 Refractometer
- V.A.G 1306 Drip tray
- V.A.G 1331 Torque wrench (5...50 Nm)
- VAS 5024 Assembly tool for spring-type clamps

Removing

- Remove noise insulation tray.

satelettronica
Protected by copyright. Copyright by Volkswagen AG.
Volkswagen AG does not guarantee or accept any liability with respect to the correctness of information in this document.
Copyright by Volkswagen AG.
Copying for private or commercial purposes, in part or in whole, is not permitted unless authorised by Volkswagen AG.

- Remove radiator grille and trim.

=> General body repairs, Exterior; Repair group 66; Trim; Removing and installing radiator grille with trim frame
Trim Removing and installing radiator grille with trim frame

- Drain coolant => Page 129 .
- Pull coolant hoses off radiator with assembly tool for spring-type clamps VAS 5024.
- Pull connectors off thermo-switch and radiator fan.
- Remove catch plate for bonnet lock.
- Remove radiator securing bolts and take out radiator to the front.

Vehicles with air conditioning system:

- Observe additional information and removal work => Page 132 .

Installing

Installation is carried out in the reverse order, when doing this note the following:

- Electrical connections and routing:

=> Current flow diagrams, Electrical fault finding and Fitting locations

- Check headlight adjustment and adjust if necessary:

=> Maintenance

- Filling with coolant => Page 129

Additional information and removal work on vehicles with air conditioner

Warning! The air conditioning system refrigerant circuit must not be opened.

Note:

To prevent damage to condenser and also to the refrigerant lines/hoses, ensure that the pipes and hoses are not stretched, kinked or bent.

- Remove retaining clamp(s) from refrigerant pipes.
- Unbolt condenser from radiator and secure to lock carrier.

Protected by copyright. Copyright for private or commercial purposes, in part or in whole, is not permitted unless authorised by Volkswagen AG. Volkswagen AG does not guarantee or accept any liability with respect to the correctness of information in this document. Copyright by Volkswagen AG.

satelettronica

1.7 - Removing and installing coolant pump

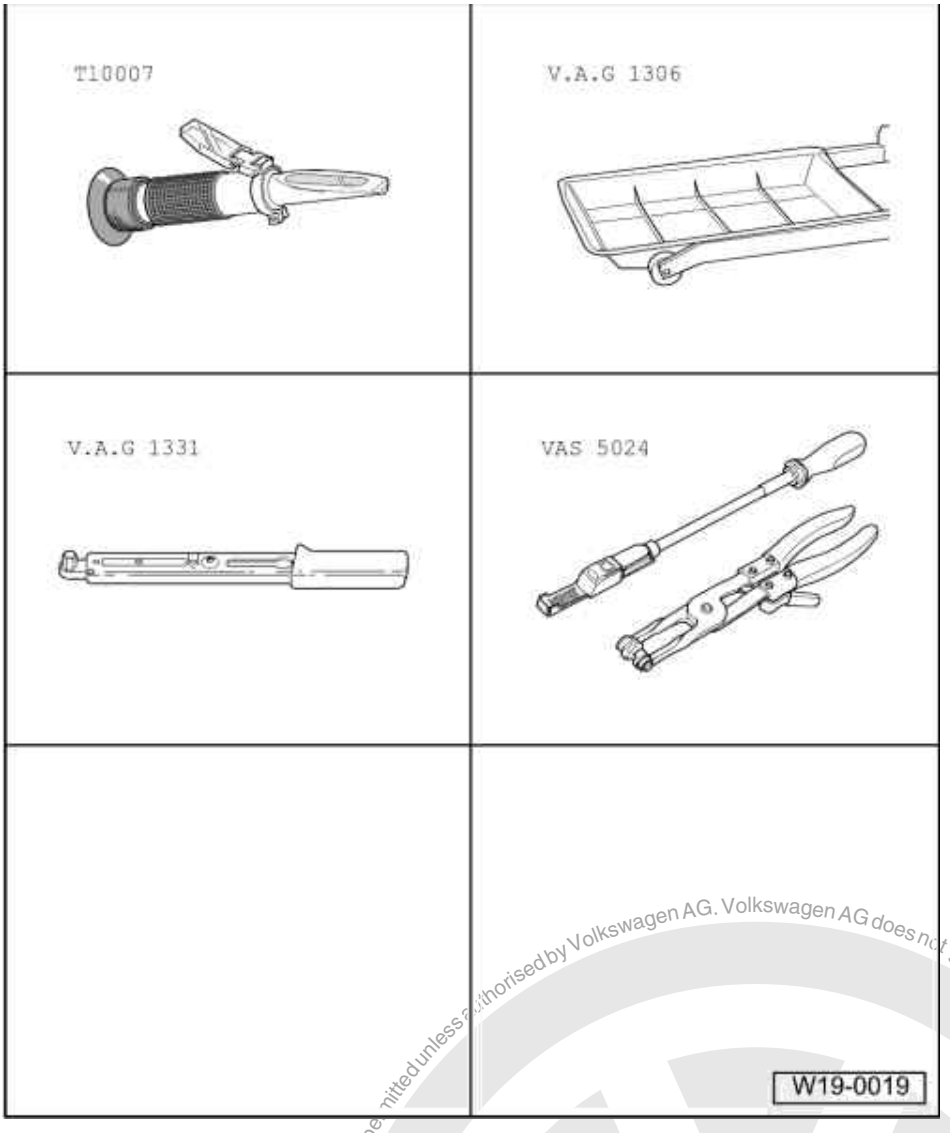

Special tools, workshop equipment, test and measuring appliances and auxiliary items required

- T10007 Refractometer
- V.A.G 1306 Drip tray
- V.A.G 1331 Torque wrench (5...50 Nm)
- VAS 5024 Assembly tool for spring-type clamps

Notes:

- The integrated coolant pump seal must not be separated from the coolant pump.
- Damaged or leaking coolant pumps must be replaced complete with seal.
- Cover toothed belt with a cloth to protect it from coolant before removing coolant pump.

Removing

- Drain coolant => Page 129 .
- First remove main drive toothed belt => Page 58 .

Protected by copyright. Copying for private or commercial purposes, in part or in whole, is not permitted unless authorised by Volkswagen AG. Volkswagen AG does not guarantee or accept any liability with respect to the correctness of information in this document. Copyright by Volkswagen AG.
satelettronica

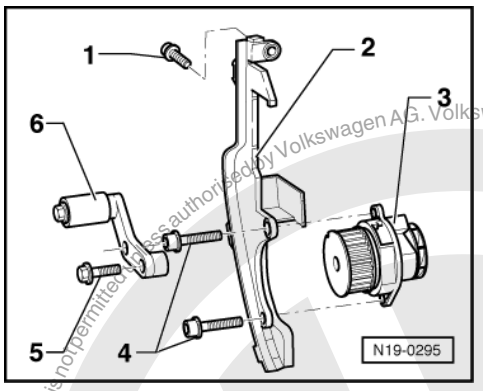

- -> Remove idler roller -6- by removing idler roller bolt -5-.
- Remove bolts -1- and -4- and remove rear toothed belt guard -2- and coolant pump -3-.

Installing

Installation is carried out in the reverse order, when doing this note the following:

- Insert coolant pump -3- in cylinder block and install securing bolt -4- together with rear toothed belt guard.

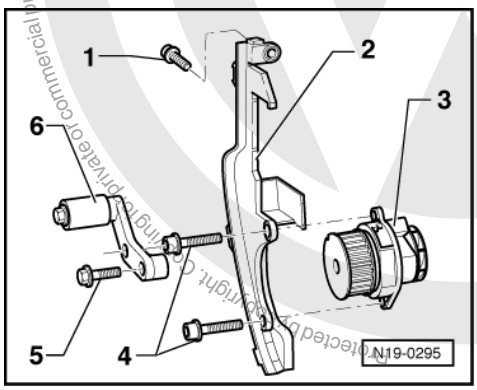

- -> Tighten securing bolts -4- to 20 Nm and -1- to 10 Nm.
- Install idler roller -6- and tighten securing bolt -5- to 50 Nm.
- Install toothed belt and tension => Page 58 .
- Install ribbed belt => Page 22 .
- Filling with coolant => Page 129

Commercial purposes, part in whole is not permitted unless authorised by Volkswagen AG. Volkswagen AG does not guarantee or accept any liability with respect to the correctness of information in this document. Copyright by Volkswagen AG.
satelettronica

20 - Fuel supply system

1 - Removing and installing parts of fuel supply system

1.1 - Removing and installing parts of fuel supply system

Notes:

- Hose connections are secured with either spring-type or clamp-type clips.
- Always replace clamp-type clips with spring-type clips.
- Fuel hoses in engine compartment must only be secured with spring-type clips. The use of clamp or screw-type clips is not permissible.
- Assembly tool VAS 5024 or hose clip pliers V.A.G 1921 are recommended for fitting spring-type clips.

Observe safety precautions=> Page 141 .

Observe rules for cleanliness => Page 142 .

Removing and installing fuel tank with attachments and fuel filter => Page 136 .

Servicing parts of electronic accelerator control (EPC) => Page 153 .

Servicing parts of the activated charcoal filter system => Page 158 .

Protected by copyright. Copying for private or commercial purposes, in part or in whole, is not permitted unless authorised by Volkswagen AG. Volkswagen AG does not guarantee or accept any liability with respect to the correctness of information in this document. Copyright by Volkswagen AG.
satelettronica

1.2 - Removing and installing fuel tank with its attachments and fuel filter

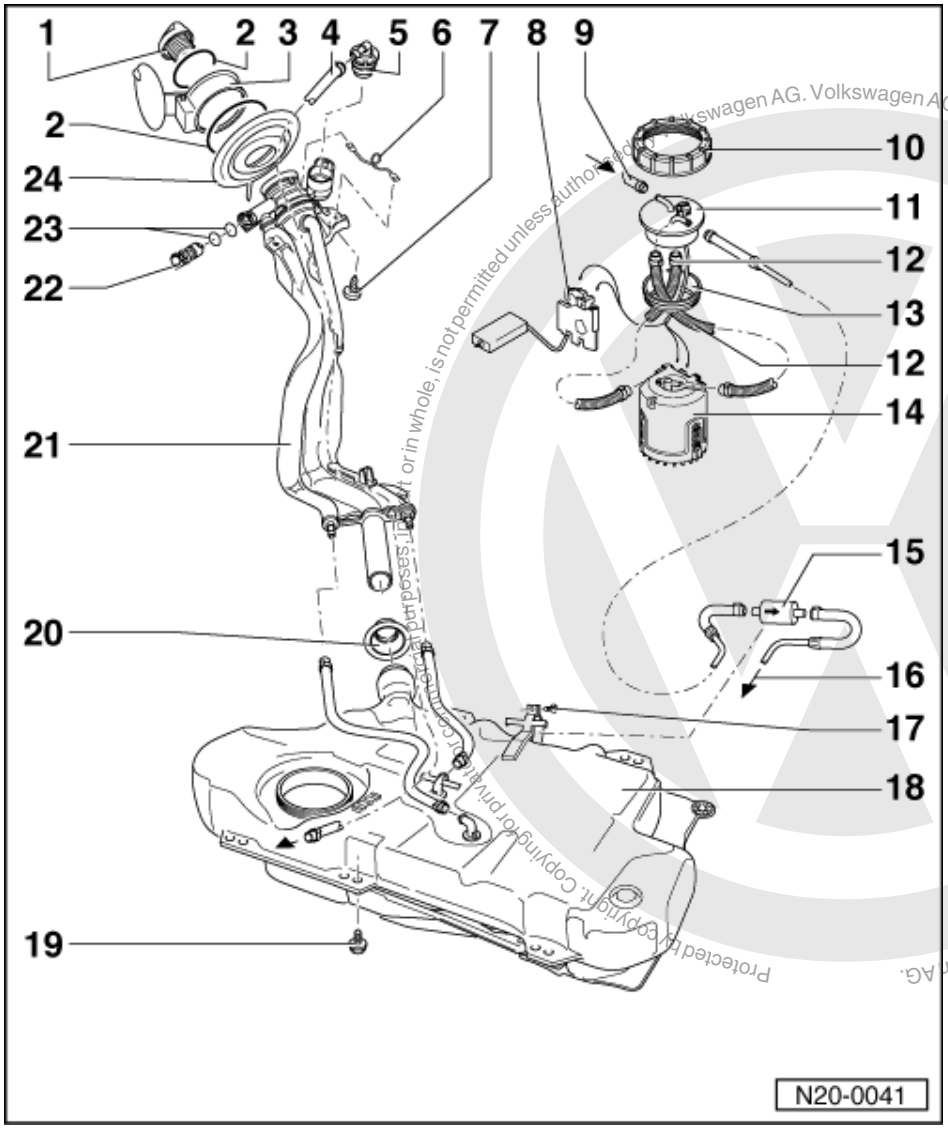

1 Cap
2 Retaining ring
3 Tank flap unit
- Removing and installing

=> General body repairs; Repair group 55; fuel flap unit fuel flap unit

4 Vent pipe
- To activated charcoal filter
  =>Page 158 , item 5

5 Gravity/overflow valve
- To remove, release locking lug and unclip valve upwards out of filler neck
- Check valve for through-flow
  valve vertical: open,
  valve tilted 90 °: closed

Protected by copyright. Copying for private or commercial purposes, in part or in whole, is not permitted unless authorised by Volkswagen AG. Volkswagen AG does not guarantee or accept any liability with respect to the correctness of information in this document. Copyright by Volkswagen AG.
satelettronica

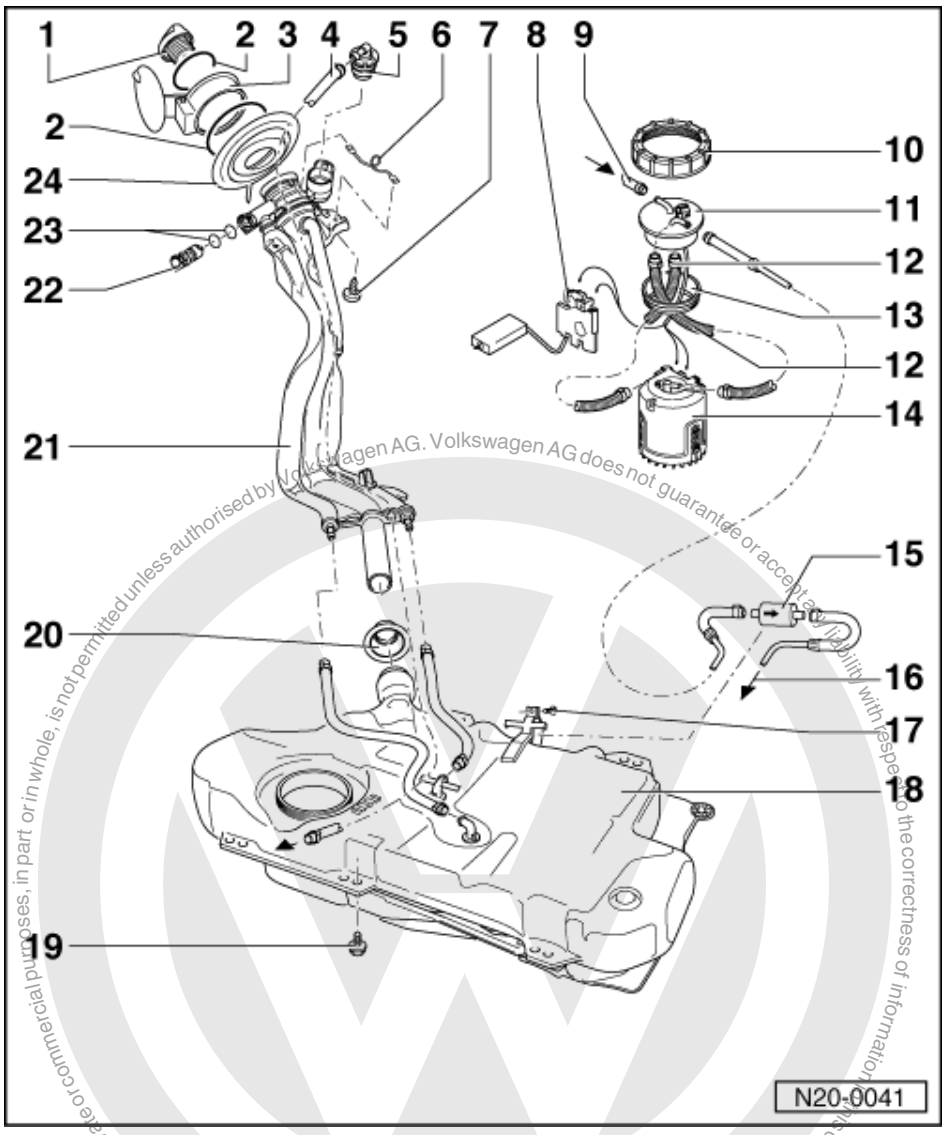

6 Earth connection
7 4 Nm
8 Fuel gauge sender
- Adjusting:

=> Current flow diagrams, Electrical fault finding and Fitting locations

9 Return hose/line
- Blue or with blue marking
- From fuel manifold

=> Repair group 24; mixture preparation, injection mixture preparation, injection

10 Union nut, 75 Nm
- Remove and install with 3217

11 Flange
- Note installation position on fuel tank => Fig. 1

12 Corrugated tube
- Must not contact fuel tank, otherwise pump noises will be transferred

satelettronica

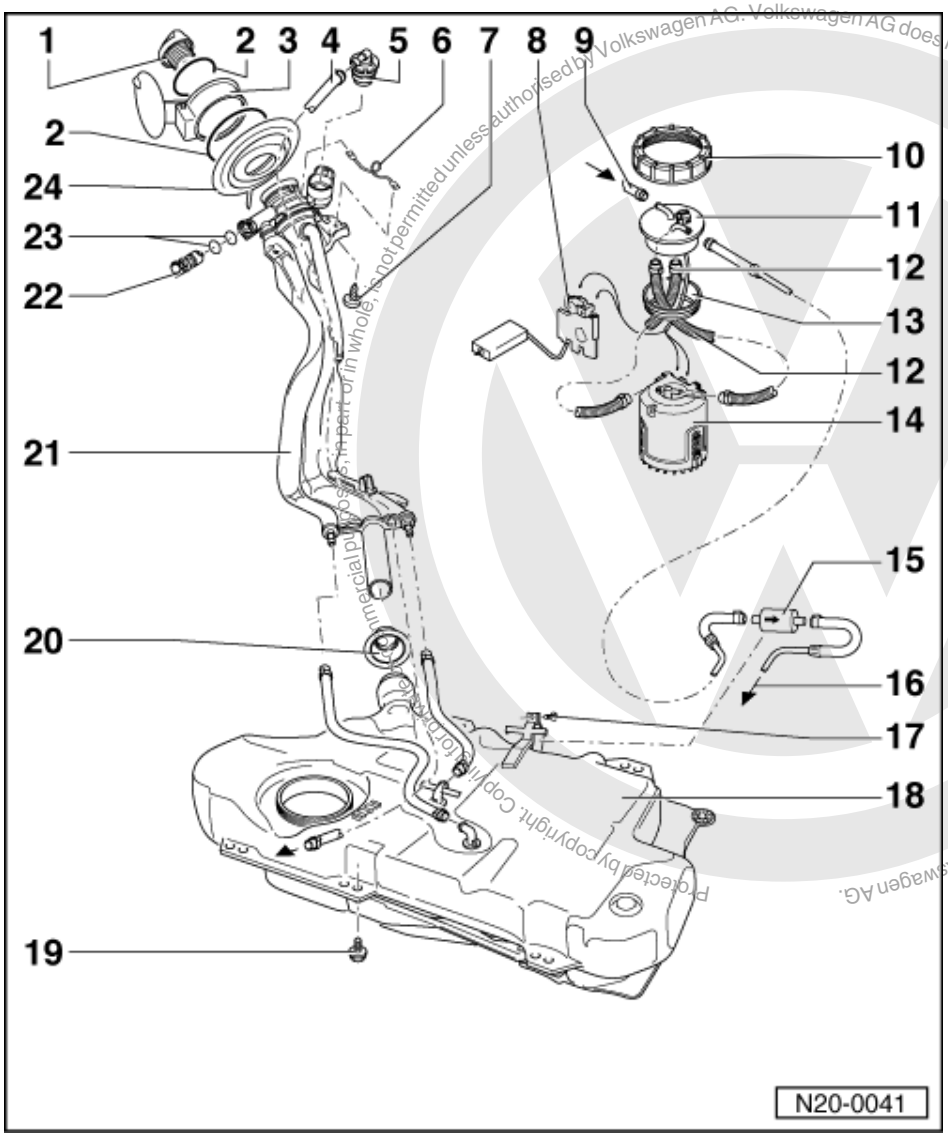

Protected by copyright. Copyright by Volkswagen AG. Volkswagen AG does not guarantee or accept any liability with respect to the correctness of information in this document. Copyright by Volkswagen AG.
satelettronica

13 Sealing ring

- Coat with fuel when installing
- Renew if damaged

14 Fuel delivery unit

- Removing and installing
  => Page 142
- Checking fuel pump
  => Page 146

Note:

After completing work on fuel delivery unit or fuel gauge sender ensure that the corrugated tubing between delivery unit and flange does not contact the fuel tank (transfer of pump noises).

15 Fuel filter

- Fitting position: Arrow points in direction of flow

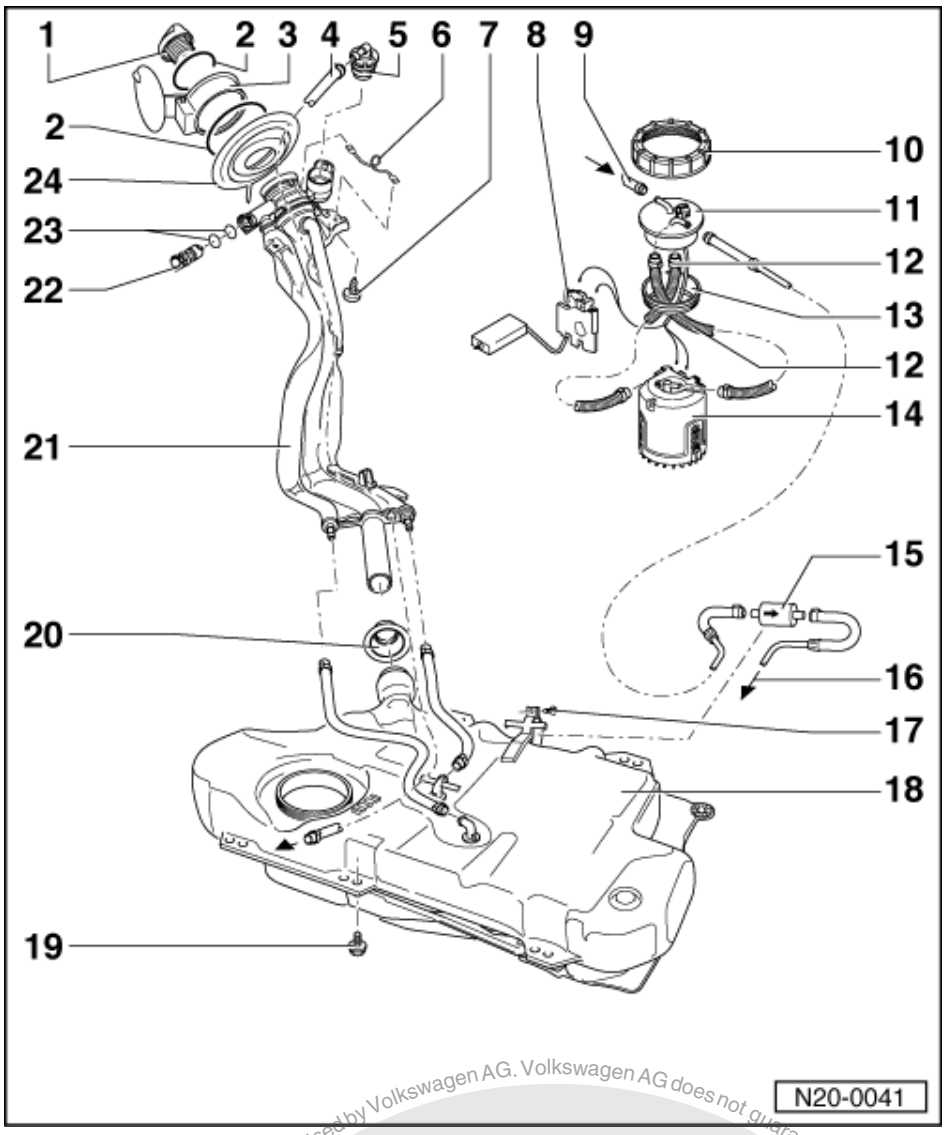

16 Supply pipe
- Black
- To fuel manifold

=> Repair group 24; mixture preparation, injection mixture preparation, injection

17 3 Nm
18 Fuel tank
- Removing and installing
  => Page 144
- Press clamping washer from heat shield tightly onto pins on vehicle floor

19 25 Nm
20 Sealing boot
- After installing filler pipes fit over fuel tank connections, having turned boot inside out

21 Filler pipes
- With non-return valve

Protected by copyright. Copying for private or commercial purposes, in part or in whole, is not permitted unless authorised by Volkswagen AG. Volkswagen AG does not guarantee or accept any liability with respect to the correctness of information in this document. Copyright by Volkswagen AG.
satelettronica

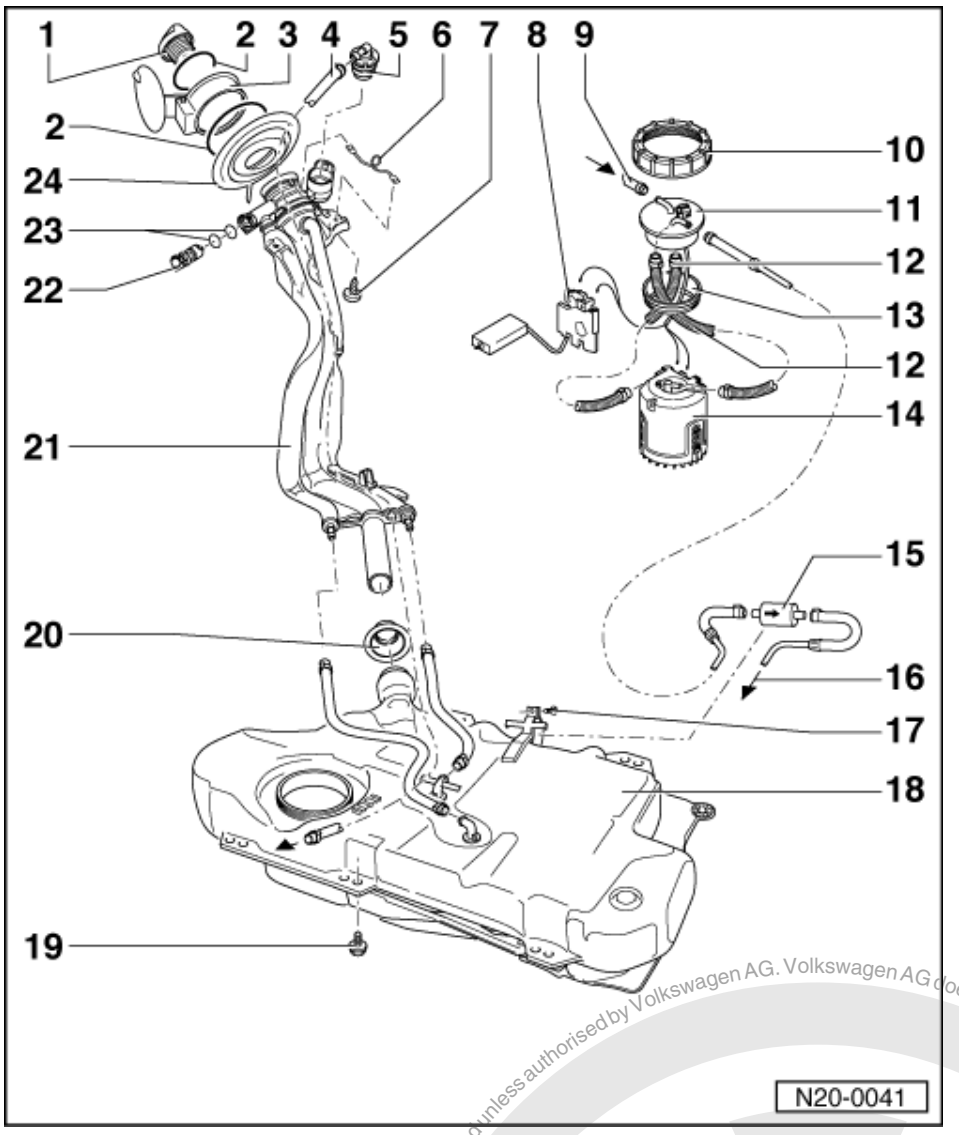

22 Vent valve

- Checking =>Fig.
- To remove pull locking latch lightly to inside -arrow- and pull valve out

23 O-ring

- Renew if damaged

24 Cup

- For filler pipes

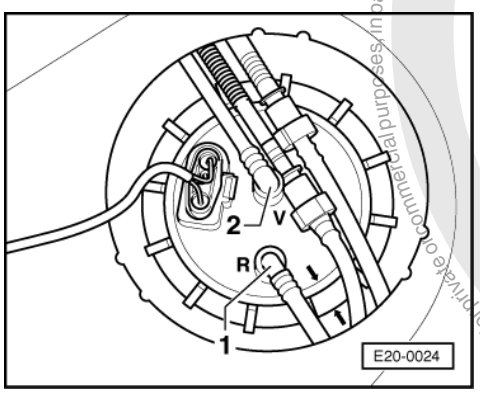

Protected by copyright. Copying for private or commercial purposes, in part or in whole, is not permitted unless authorised by Volkswagen AG. Volkswagen AG does not guarantee or accept any liability with respect to the correctness of information in this document. Copyright by Volkswagen AG.
satelettronica

-> Fig. 1 Installation position of fuel delivery unit flange

Marking on the flange must align with marking on the fuel tank.

Blue or blue marked return pipe -1- to connection with identification -R-.

Black supply pipe -2- to connection with identification -V-.

Note:

After installing fuel delivery unit flange, check that the supply, return and breather pipes are still clipped onto the fuel tank.

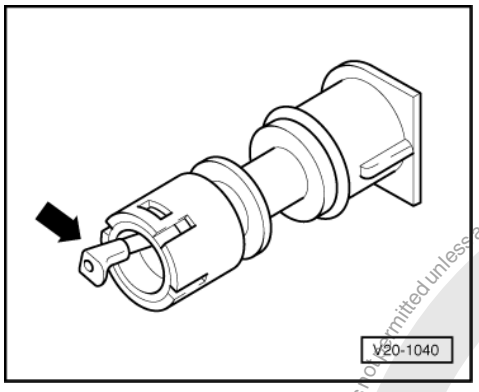

-> Fig. 2 Checking vent valve

Lever in rest position: Closed

Lever pushed in direction of arrow: Open

Note:

Before installing vent valve remove fuel tank cap.

1.3 - Safety precautions when working on the fuel supply system

Warning!
Fuel supply lines are under pressure! Before removing from hose connection wrap a cloth around the connection. Then release pressure by carefully pulling hose off connection.

When removing and installing the fuel gauge sender or fuel pump (fuel delivery unit) from a full or partly full fuel tank the following must be observed:

- Before commencing work, switch on exhaust extraction system and place an extraction hose close to the sender opening in the fuel tank to extract escaping fuel fumes.
  If no exhaust extraction system is available, a radial fan (as long as motor is not in air flow) with a displacement greater than 15 m3/h can be used.
- Prevent skin contact with fuel! Wear fuel-resistant gloves!

Protected by copyright. Copying for private or commercial purposes, in part or in whole, is not permitted unless authorised by Volkswagen AG. Volkswagen AG does not guarantee or accept any liability with respect to the correctness of information in this document. Copyright by Volkswagen AG.
satelettronica

1.4 - Rules for cleanliness

When working on the fuel supply/injection system, pay careful attention to the following "5 rules":

- Thoroughly clean all unions and the adjacent areas before disconnecting.
- Place parts that have been removed on a clean surface and cover. Do not use fluffy cloths!
- Carefully cover opened components or seal, if the repair cannot be carried out immediately.
- Only install clean components:
  Only unpack replacement parts immediately prior to installation.
  Do not use parts that have been stored loose (e.g. in tool boxes etc.).
- When the system is open:
  Do not work with compressed air if this can be avoided.
  Do not move vehicle unless absolutely necessary.

Protected by copyright. Copying for private or commercial purposes, in part or in whole, is not permitted unless authorised by Volkswagen AG. Volkswagen AG does not guarantee or accept any liability with respect to the correctness of information in this document. Copyright by Volkswagen AG.

1.5 - Removing and installing fuel delivery unit

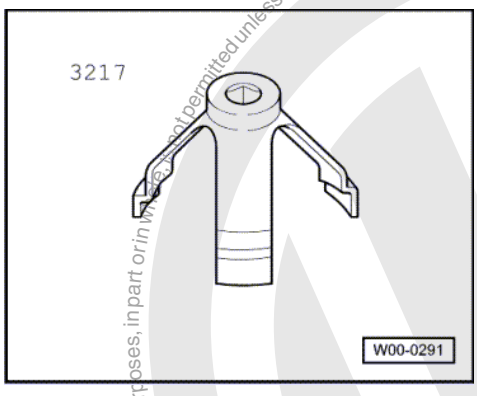

Special tools, workshop equipment, testers, measuring instruments and auxiliary items required

- 3217 Ring nut spanner

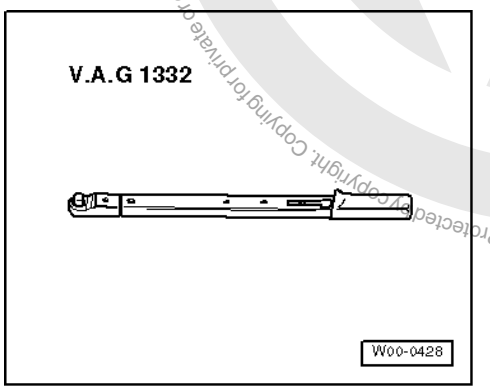

- V.A.G 1332 Torque wrench (40...200 Nm)

Removing

- First check whether a coded radio is fitted. If this is the case obtain the anti-theft coding.
- Note safety precautions before starting work => Page 141
- With ignition switched off disconnect battery earth strap.
- Fold rear seat forwards.
- Remove cover under bench seat.

satelettronica

Warning!
Fuel supply lines are under pressure! Before removing from hose connection wrap a cloth around the connection. Then release pressure by carefully pulling hose off connection.

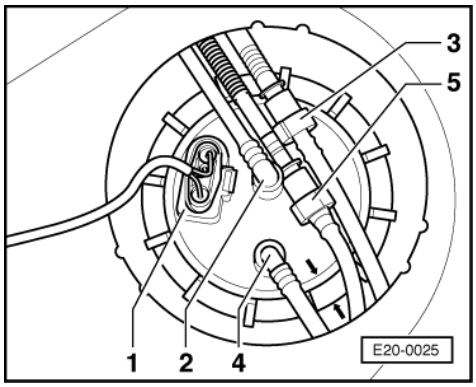

- -> Pull off connector -1-.
- Pull off/separate supply and return pipes -3- and -4- to fuel rail.
- Pull off/separate supply pipe -2- to fuel filter and bleeder pipe -5-.

Note:
Press buttons on hose couplings to do this.

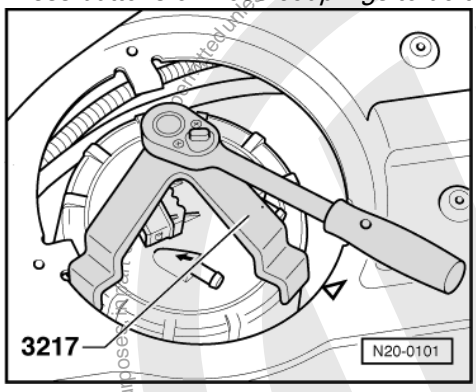

- -> Remove union nut with spanner 3217.
- Pull fuel delivery unit and seal out of opening in the fuel tank.

Note:
If the delivery unit is to be renewed then drain old delivery unit before disposal.

Installing
- Installation of the fuel delivery unit is carried out in the reverse order.

Notes:
- When inserting the fuel delivery unit ensure that the fuel gauge sender is not bent.
- Coat flange seal with fuel when fitting.

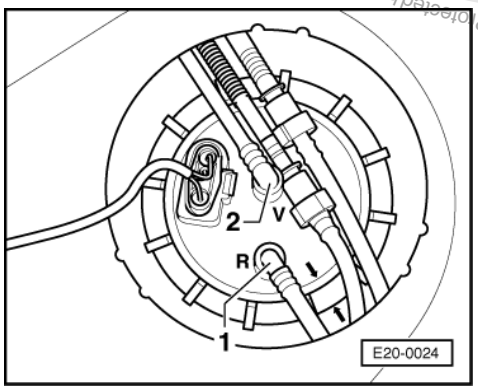

satelettronica

- Ensure fuel hoses are seated securely.
- After installing fuel delivery unit, check that the supply, return and vent pipes are still clipped onto fuel tank.
- -> Note installation position of fuel delivery unit flange:
  The marking on flange must align with marking on fuel tank -arrows-.

1.6 - Removing and installing fuel gauge sender

Removing

- Removing fuel delivery unit
  => Page 142 .

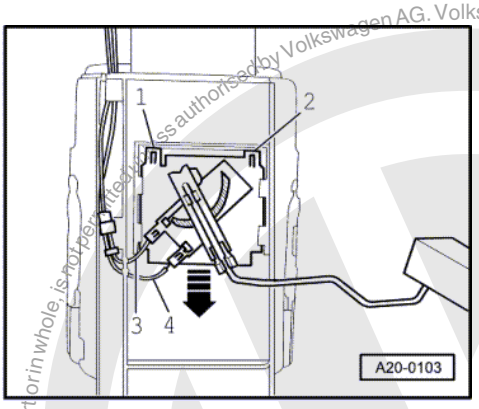

- -> Release and pull off the terminals for wires -3- and -4-.
- Lift retaining tabs -1- and -2- with a screwdriver and pull fuel gauge sender out downwards -arrows-.

Installing

- Insert fuel gauge sender in the guides on the fuel delivery unit and push up until it engages.
- Installing fuel delivery unit
  => Page 142 .

1.7 - Removing and installing fuel tank

Removing

- First check whether a coded radio is fitted. If this is the case obtain the anti-theft coding.
- With ignition switched off disconnect battery earth strap.
- Fold rear seat forwards.

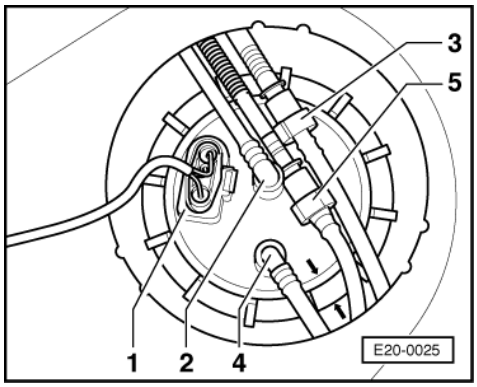

- Remove cover in luggage boot floor.
- -> Pull off connector -1-.
- Pull off/separate supply and return pipes -3 and 4- to fuel rail.

Protected by copyright. Copying for private or commercial purposes, in part or in whole, is not permitted unless authorised by Volkswagen AG. Volkswagen AG does not guarantee or accept any liability with respect to the correctness of information in this document. Copyright by Volkswagen AG.
satelettronica

- Pull off/separate supply pipe -2- to fuel filter and bleeder pipe -5-.

Note:

Press buttons on hose couplings to do this.

- Drain fuel tank.

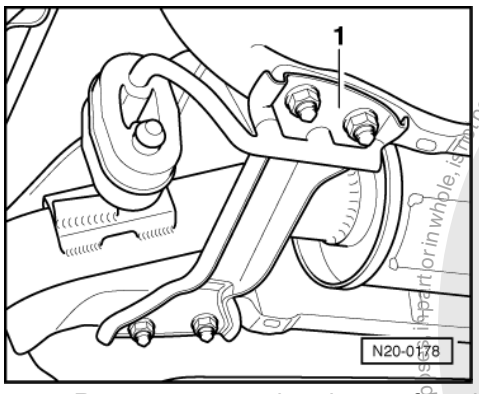

- -> Remove support bracket -1- from body.
- Remove all rear exhaust system mountings from body. Then lower the exhaust system slightly and secure to body with wire.
- Remove rear right wheel.
- Detach filler pipe from body.
- Take filler cap off filler neck and detach filler neck from cup.
- Remove filler neck.
- Now the fuel tank can be detached from body and removed together with the heat shield.

Installing

Installing is basically in the reverse order but note following:

- Breather and fuel hoses are to be installed kink-free.
- Secure fuel hoses with screw-type clamps.
- Do not interchange supply and return hose (return hose blue or blue markings, supply hose black).

Protected by copyright. Copying for private or commercial purposes, in part or in whole, is not permitted unless authorised by Volkswagen AG. Volkswagen AG does not guarantee or accept any liability with respect to the correctness of information in this document. Copyright by Volkswagen AG.
satelettronica

1.8 - Checking fuel pump

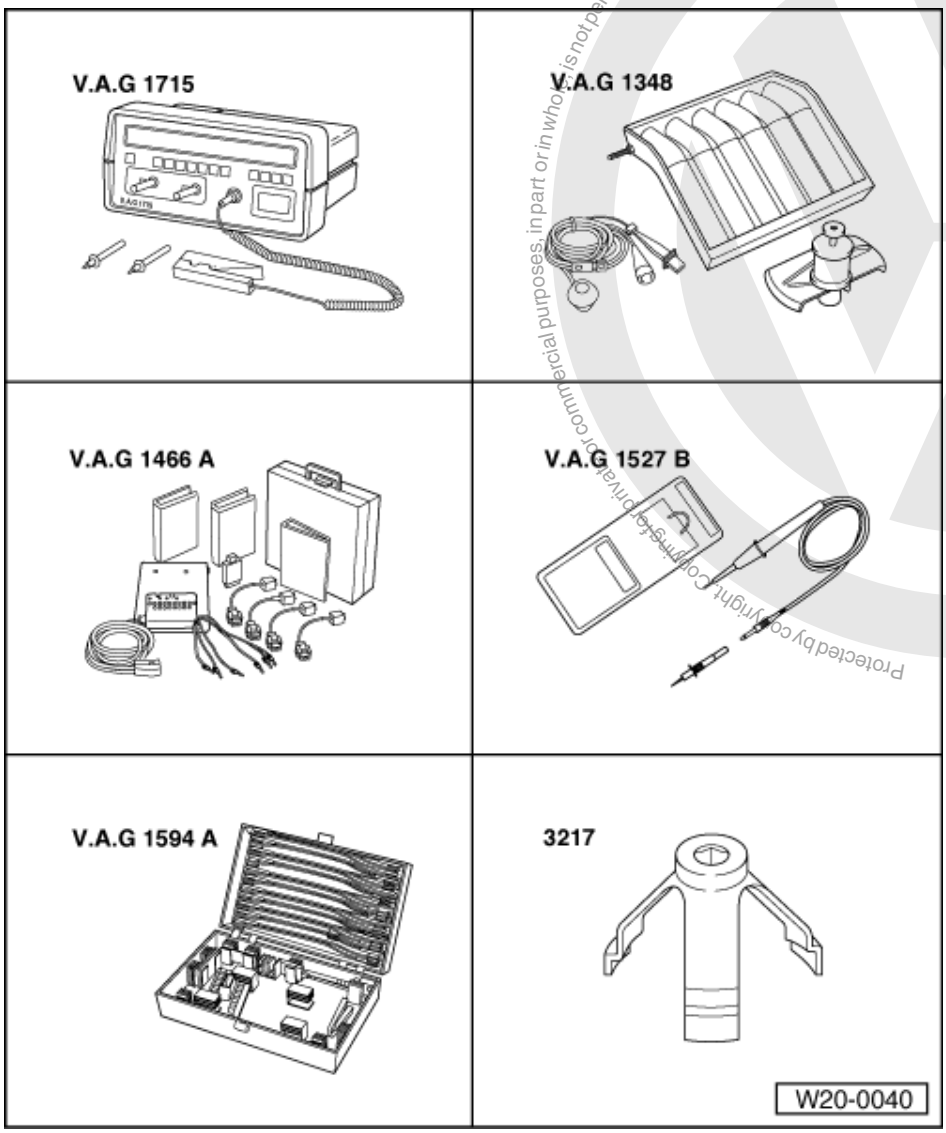

Special tools, workshop equipment, test and measuring appliances and auxiliary items required

- V.A.G 1715 Multimeter
- V.A.G 1348/3A Remote control with V.A.G 1348/3-2 adapter cable
- V.A.G 1466 Test system
- V.A.G 1527 B Diode test lamp
- V.A.G 1594 A Adapter set
- 3217 Union nut spanner

Protected by copyright. Copying for private or commercial purposes, in part or in whole, is not permitted unless authorised by Volkswagen AG. Volkswagen AG does not guarantee or accept any liability with respect to the correctness of information in this document. Copyright by Volkswagen AG.
satelettronica

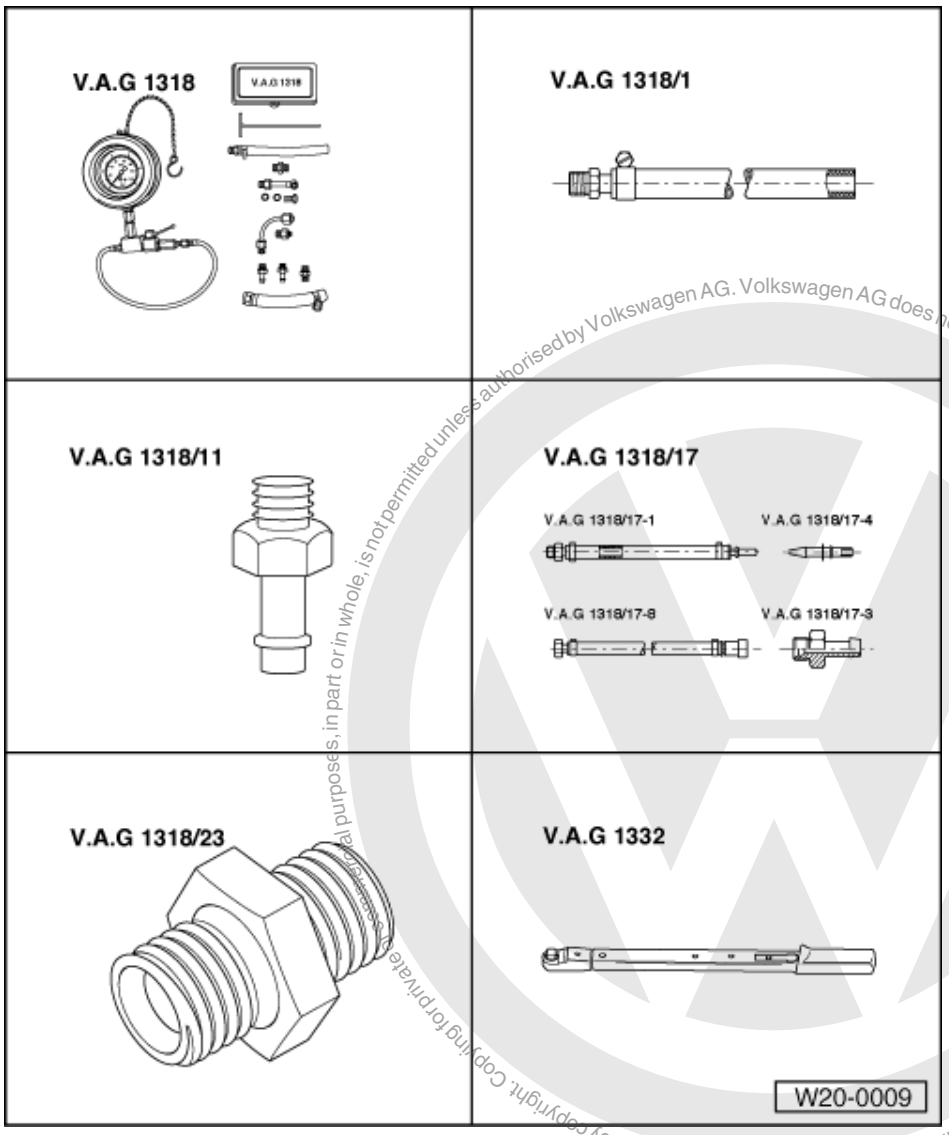

- V.A.G 1318 Pressure tester
- V.A.G 1318/1 Adapter
- V.A.G 1318/11 Adapter
- V.A.G1318/17 Adapter
- V.A.G 1318/23 Adapter
- V.A.G 1332 (40...200 Nm) Torque wrench
- Measuring container
- Current flow diagram

Check conditions

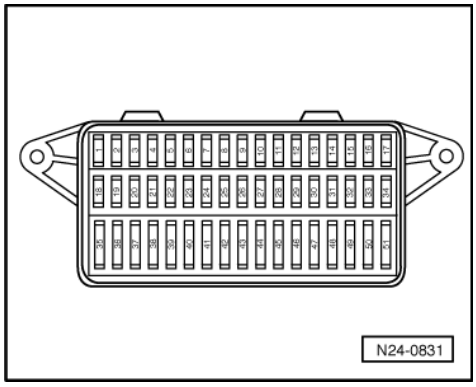

Protected by copyright. Copying for private or commercial purposes, in part or in whole, is not permitted unless authorised by Volkswagen AG. Volkswagen AG does not guarantee or accept any liability with respect to the correctness of information in this document. Copyright by Volkswagen AG.
satelettronica

- Battery voltage at least 11.5 V
- -> Fuse No. 40 OK.

Checking function and voltage supply

- Remove cover from fuel delivery unit.
- Briefly operate starter. Fuel pump must be heard to run.
- Switch off ignition.

If the fuel pump does not run:

- Remove cover in front of fuse holder.
- Pull fuse No. 40 out of fuse holder.
- Connect remote control V.A.G 1348/3A with adapter cable V.A.G 1348/3-2 to contact 40a to fuel pump and battery positive (+).
- Operate remote control.

Fuel pump runs:

- Check activation of fuel pump relay using current flow diagram:

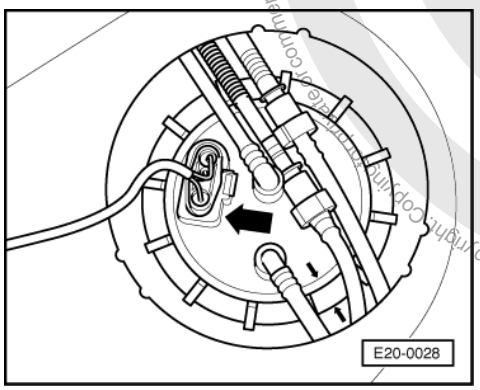

=> Current flow diagrams, Electrical fault finding and Fitting locations

Fuel pump does not run:

- -> Pull 4 pin connector off flange on fuel delivery unit -arrow-.

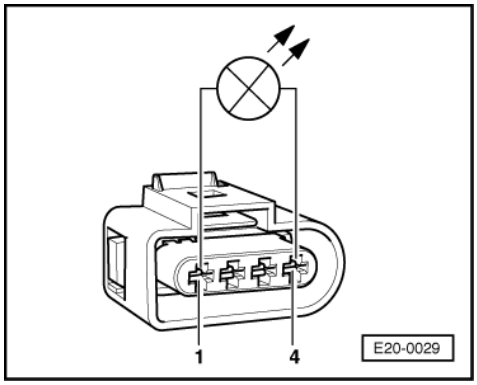

- -> Connect diode test lamp V.A.G 1527 with aux. cables from V.A.G 1594 to the outer contacts of the connector.
- Operate remote control.
  LED must light up

LED does not light up:

- Locate and eliminate open circuit using current flow diagram:

Protected by copyright. Copyright by Volkswagen AG. Volkswagen AG does not guarantee or accept any liability with respect to the correctness of information in this document. Copyright by Volkswagen AG. Not permitted unless authorised by Volkswagen AG. Volkswagen AG does not guarantee or accept any liability with respect to the correctness of information in this document. Copyright by Volkswagen AG.
satelettronica

=> Current flow diagrams, Electrical fault finding and Fitting locations

LED lights up (voltage supply OK.):

- Removing fuel delivery unit
  => Page 142 .
- Check that the electrical wires between flange and fuel pump are connected.

If no open circuit can be found:

- Fuel pump defective, renew fuel delivery unit =>Page 142 , Removing and installing fuel delivery unit.

Checking delivery rate

Check conditions

- Voltage supply OK.
- Remote control V.A.G 1348/3A connected.

Test sequence

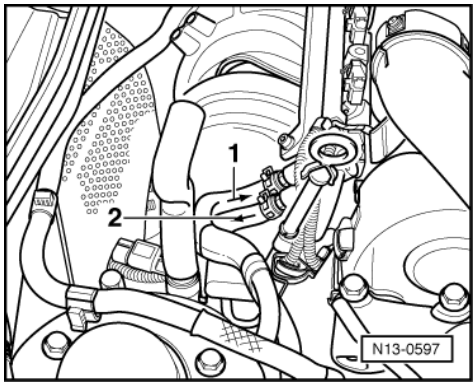

- Remove filler cap from fuel tank filler neck.
- -> Pull off supply hose -1- and catch fuel that escapes in a cloth.

Warning!
Fuel system is under pressure! Before opening the system place a cloth around the connection. Then release pressure by carefully loosening the connection.

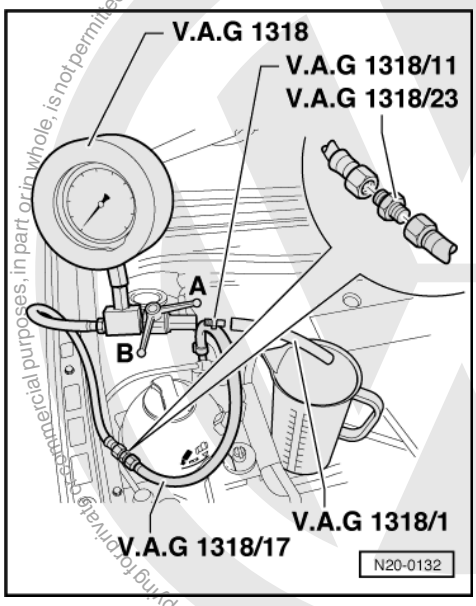

satelettronica

- -> Connect pressure gauge V.A.G 1318 with adapter 1318/23 and V.A.G 1318/17 to the fuel supply pipe.
- Push the hose V.A.G 1318/1 onto the adapter V.A.G 1318/11 on the pressure gauge and hold hose in a measuring container.
- Open the pressure gauge shut-off tap. The lever then points in the direction of flow -A-.
- Operate remote control V.A.G 1348/3A and slowly close cut-off tap, until pressure gauge shows
  3 bar.
  From this point on do not move position of cut-off tap.
- Empty measuring container.
- The fuel pump delivery range is dependent upon battery voltage. Therefore connect the multimeter with adapter cables from V.A.G 1594 to the vehicle battery.
- Operate remote control for
  30 seconds
  and measure battery voltage

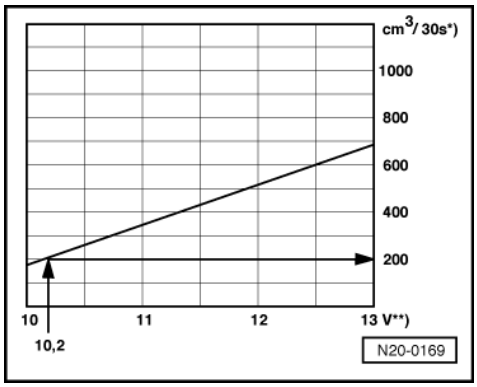

- -> Compare the quantity of fuel delivered with specification.

*) Minimum delivery cm3/30 seconds

**) Voltage at fuel pump with engine stopped and pump running (approx. 2 volts less than battery voltage).

Example:

During the test a voltage of 12.5 volts is measured at the battery. As the voltage at the pump is approx. 2 volts less than the battery voltage then this will equate to a minimum delivery of 200 cm3/30 s.

If the minimum delivery rate is not attained:

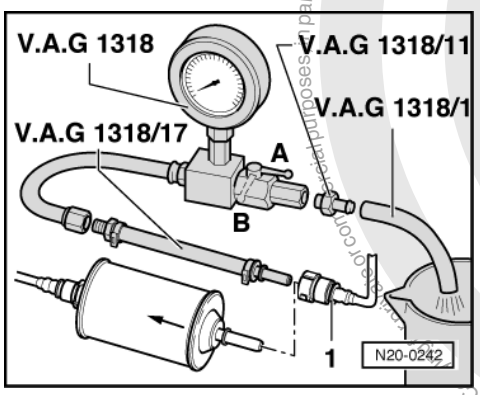

- Check the fuel pipes for possible restrictions (kinks) or blockages.
- -> Pull the supply hose off fuel filter inlet.
- Connect the pressure gauge V.A.G 1318 with adapter /17 on hose.
- Repeat delivery rate check.

If the minimum delivery rate is now attained:

- Replace the fuel filter.

Protected by copyright. Copyright by Volkswagen AG. Volkswagen AG does not guarantee or accept any liability with respect to the correctness of information in this document. Copyright by Volkswagen AG. Reproduction or copies for commercial purposes or part thereof is not permitted unless authorised by Volkswagen AG.
satelettronica

If the minimum delivery rate is again not attained:
- Remove the fuel delivery unit and check the strainer filter for soiling.

Only when up to now no fault has been detected:
- Replace the fuel delivery unit.

If the delivery rate has been attained but nevertheless you suspect a fuel supply system fault (e.g. intermittent failure of fuel supply system):
- Check the current draw of the fuel pump as follows:
- Reconnect all disconnected fuel pipes.

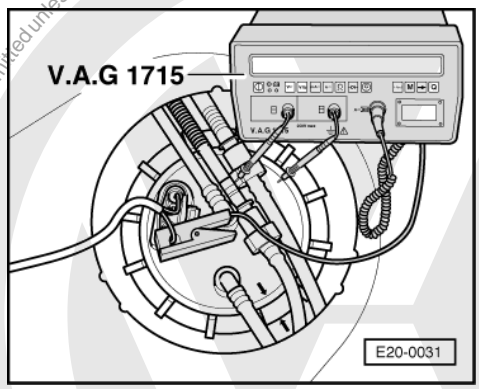

- -> Connect the multimeter V.A.G 1715 using the current clamp to the red/yellow wire of wiring harness.
- Start the engine and run at idling speed.
- Measure the current draw of the fuel pump.
  Specification: max. 8 amps.

Note:
If the fuel system malfunction is intermittent, you can perform the check during a test drive with the help of a 2nd person.

If the current draw is exceeded:
- Replace the fuel delivery unit.

Checking fuel pump non-return valve

Test conditions
- Remote control V.A.G 1348/3A is still connected.
- Pressure gauge V.A.G 1318 is still connected.

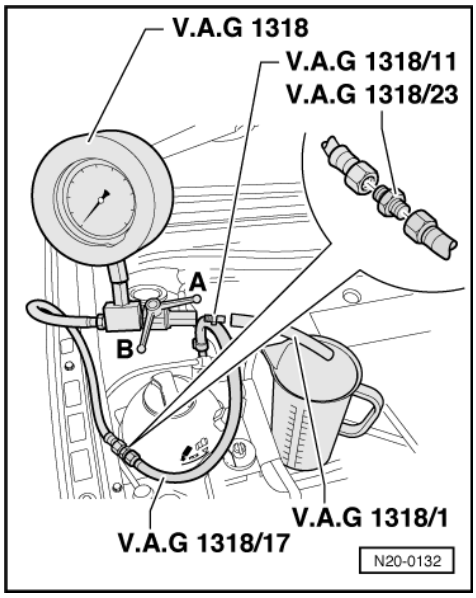

satelettronica

Test sequence

Note:

With this check the fuel supply pipe connections from the fuel delivery unit to the point at which the pressure gauge V.A.G 1318 is connected will be checked for leaks at the same time.

- -> Close pressure gauge cut-off tap (lever at right angles to throughflow direction).
- Separate remote control at short intervals, until a pressure of
  Approx. 3 bar
  has built up.

Warning! Danger of spray when opening the shut-offtap, hold container over the free connection of the pressure gauge.

- If pressure builds up too high, lower excess pressure by carefully opening the shut-off tap.
- Watch pressure drop on gauge. After 10 minutes the pressure must not drop below
  2.5 bar.

If the pressure drops further:

- Check pipe connections for leaks.

If no fault is detected in the wiring:

- Fuel pump defective, renew fuel delivery unit =>Page 142 , Removing and installing fuel delivery unit.

2 - Electronic power control (EPC)

2.1 - Electronic power control (EPC)

2.2 - Function of EPC system

With the EPC system the throttle valve is not operated by a cable. There is no mechanical connection between accelerator and throttle valve.

The position of the accelerator is transmitted to the engine control unit by two accelerator position senders (variable resistors together in a housing) which are connected to the accelerator pedal.

The position of the accelerator (drivers requirement) is the main input value for the engine control unit.

The throttle valve is operated over the complete revolution and load range by an electric motor (throttle valve positioner) in the throttle valve control part.

The throttle valve is operated by the throttle valve positioner which is controlled by the engine control unit.

When the engine is not running and the ignition is switched on the engine control unit moves the throttle valve exactly as prescribed by the accelerator pedal position sender. This means that when the accelerator is depressed halfway the throttle valve positioner opens the throttle valve by the same amount, the throttle is then approximately half open.

When the engine is running (under load) the engine control unit can open or close the throttle valve independently of the accelerator pedal position sender.

This means that the throttle valve can already be completely open even though the accelerator pedal is depressed half way.

Protected by Copyright. Copying for private or commercial purposes, in part or in whole, is not permitted unless authorised by Volkswagen AG. Volkswagen AG does not guarantee or accept any liability with respect to the correctness of information in this document. Copyright by Volkswagen AG.

satelettronica

This also gives vastly improved consumption and exhaust emission levels at certain load conditions.

It is incorrect to believe that the "EPC" comprises of one or two components only. The EPC is a system, which includes all components which have an influence to control or monitor the position of the throttle valve, e.g. the accelerator pedal position sender, the throttle valve control part, the EPC warning lamp, the engine control unit...).

Observe safety precautions=> Page 141 .

Observe rules for cleanliness => Page 142 .

2.3 - Servicing parts of electronic power control (EPC)

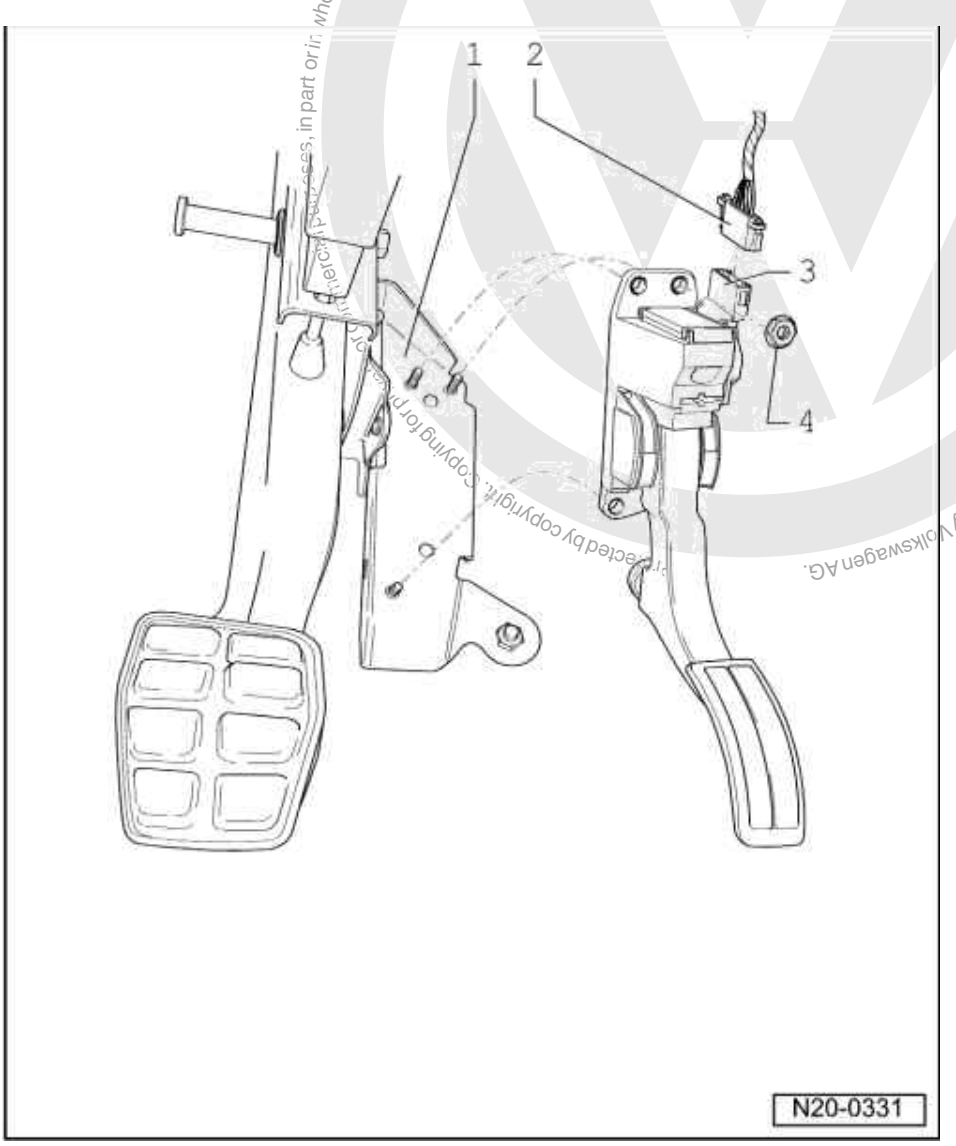

1 Bracket
- Removing and installing

=> Brake systems; Repair group 46; Brake pedal - Assembly overview Brake pedal - Assembly overview

2 Connector
- Black, 6-pin

3 Accelerator pedal position sender (G79)
- Not adjustable
- The accelerator pedal position passes the position of the pedal on to the engine control unit

satelettronica

- Remove footwell cover to remove sender
- Checking =>Page 154

4 10 Nm

2.4 - Checking accelerator pedal position sender

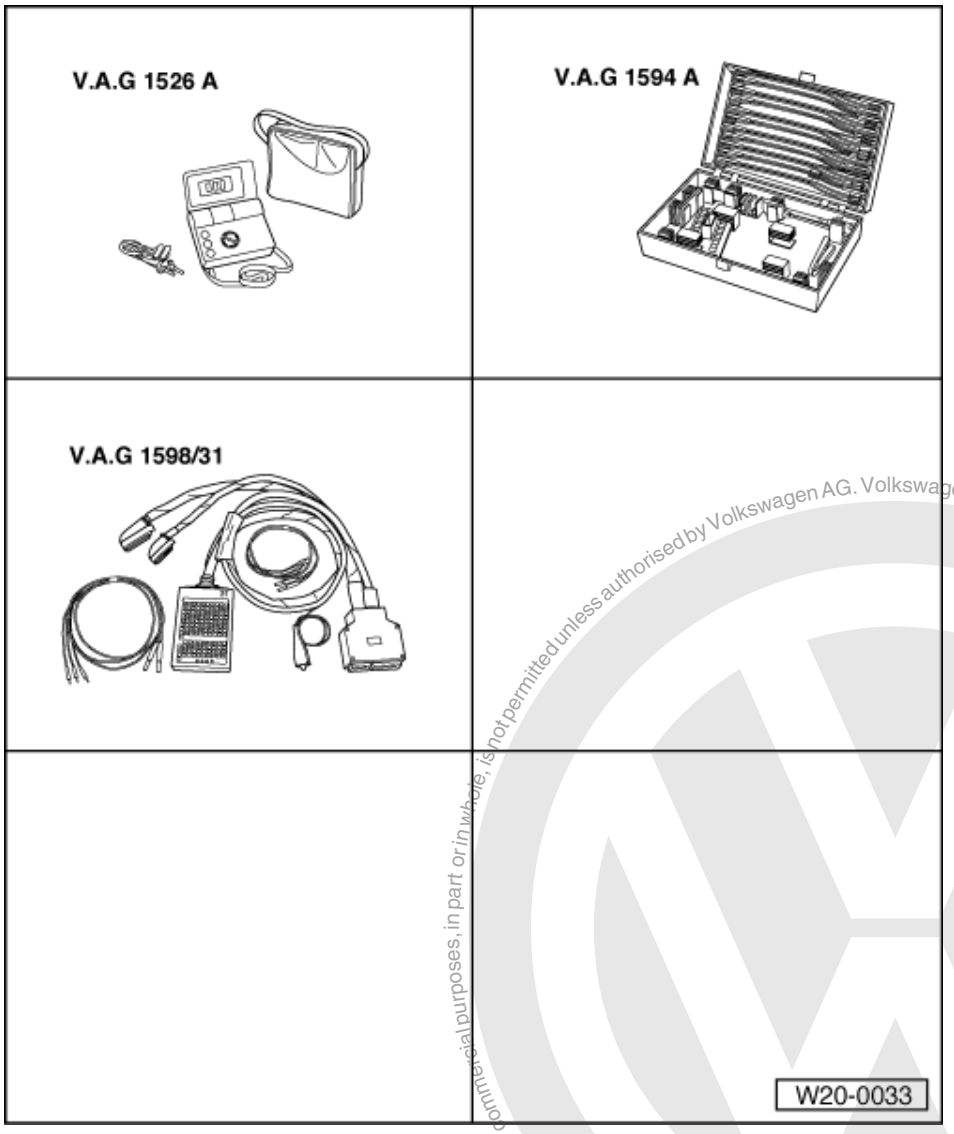

Special tools, workshop equipment, test and measuring appliances and auxiliary items required

- V.A.G 1526 Hand multimeter
- V.A.G 1594 A Adapter set
- V.A.G 1598/31 Test box
- Fault reader V.A.G 1551 or vehicle system tester V.A.G 1552 with cable V.A.G 1551/3A
- Current flow diagram

Function

Both accelerator pedal position senders -G79- and -G185- on the accelerator pedal pass the driver's requirements on to the engine control unit independently of one another. Both senders are installed together in a housing.

Protected by copyright. Copying for private or commercial purposes, in part or in whole, is not permitted unless authorised by Volkswagen AG. Volkswagen AG does not guarantee or accept any liability with respect to the correctness of information in this document. Copyright by Volkswagen AG.
satelettronica

Check conditions

- The fuses must be OK.
- The battery voltage must be at least 11.5 V.

Test sequence

- Connect fault reader V.A.G 1551 (V.A.G 1552) and with ignition switched on select engine electronics control unit with the "Address word" 01:

=> Repair group 01; Self-diagnosis; Connecting fault reader V.A.G 1551 and selecting engine electronics control unit Self-diagnosis Connecting fault reader V.A.G 1551 and selecting engine electronics control unit

-> Indicated on display:

```
Rapid data transfer      HELP
Select function XX
```

- Press keys 0 and 8 for the function "Read measured value block" and confirm entry with Q key.

-> Indicated on display:

```
Read measured value block
Input display group number XXX
```

- Press keys 0, 6 and 2 for the "Display group number 62" and confirm entry with Q key.

-> Indicated on display:
(1...4 = Display zones)

```
Read measured value block 62
     1     2     3     4
```

- Check specifications of sender 1 (G79) at idling stop in display zone 3.
  Specification: 12...97 %
- Check specifications of sender 2 (G185) at idling stop in display zone 4.
  Specification: 4...49 %

Note:

The engine control unit calculates the voltage values of the angle sender in percent relative to 5 Volt and displays these as a percentage figure (5 Volt supply voltage equates to 100 %).

- Operate the accelerator pedal slowly until fully depressed and observe the angle sender figures in display zones 3 and 4:

  The percent figures in display zone 3 must rise evenly. The tolerance range of 12...97 % is not covered completely.

  The percent figures in display zone 4 must rise evenly. The tolerance range of 4...49 % is not covered completely.

Note:

The figure displayed in display zone 3 must always be approximately double that displayed in display zone 4.

If the display does not indicate as described:

- Press the ⇒key.
- Press keys 0 and 6 for the function "End output" and confirm entry with the Q key.
- Switch off ignition.
- Check accelerator pedal position sender voltage supply and wiring connections =>Page 155 .

Checking voltage supply and wiring to control unit

- Remove cover in footwell (driver's side).

Protected by copyright. Copyright by Volkswagen AG. Volkswagen AG does not guarantee or accept any liability with respect to the correctness of information in this document. Copyright by Volkswagen AG. Copying for private or commercial purposes, in part or in whole, is not permitted unless authorised by Volkswagen AG.
satelettronica

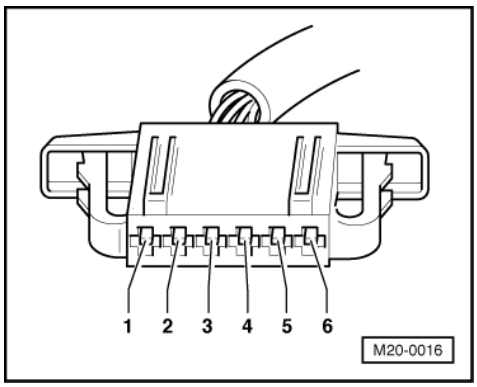

- Disconnect 6-pin connector for accelerator pedal position sender.
- Switch ignition on.
- -> Connect multimeter to measure voltage at the following contacts of the connector:
  Contact 1 + earth
  Contact 1 + 5
  Contact 2 + earth
  Contact 2 + 3
  Specification: minimum 4.5 V
- Switch off ignition.

If the specifications are not obtained:

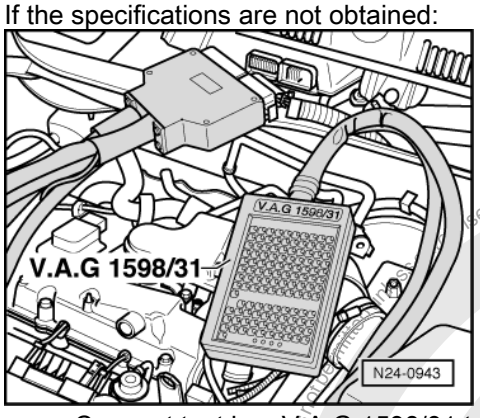

- -> Connect test box V.A.G 1598/31 to control unit wiring harness. The engine control unit remains disconnected.
- Switch off ignition.

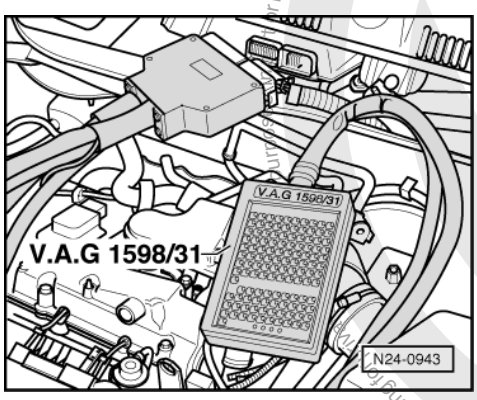

- -> Check wiring between test box and connector for open circuit using current flow diagram.
  Contact 1+ socket 19
  Contact 2+ socket 18
  Contact 3+ socket 50
  Contact 4+ socket 51
  Contact 5+ socket 45
  Contact 6+ socket 64
  Wire resistance: max. 1.5 ω
- Additionally check the wiring for short to battery positive or earth.

Protected by copyright. Copyright by Volkswagen AG.
Volkswagen AG does not guarantee or accept any liability with respect to the correctness of information in this document.
satelettronica

- Additionally check wires for short to one another.

If no fault is detected in the wiring:

- Renew accelerator pedal position sender
  => Page 153 , item 3

3 - Activated charcoal filter system

3.1 - Activated charcoal filter system

3.2 - Function

Depending upon the air pressure and ambient temperature, fuel vapour will form above the level of fuel in the tank.

The activated charcoal filter system prevents these HC emissions escaping to the atmosphere.

Fuel vapours pass from the highest point in the tank through the gravity valve (which closes at an angle of 45 °) and the breather valve in limited quantities.

The activated charcoal stores these vapours like a sponge.

The Lambda control is active when driving (engine warm), the solenoid valve 1 (N80), (also known as the regeneration valve), is activated (pulsed) from engine control unit depending upon load and engine speed. The opening period is dependent on the input signals.

Intake manifold vacuum draws fresh air through the vent opening on the underside of the activated charcoal filter during the purging procedure (regenerating the activated charcoal). The fuel vapours stored in the activated charcoal and fresh air are pulse-fed for combustion.

The breather valve prevents fuel vapours from being drawn from the tank when the solenoid valve 1 (N80) is open and intake manifold vacuum is present. It therefore ensures that the evacuation of the activated charcoal filter has priority.

No voltage (e.g. wiring open circuit) the tank venting valve is closed. The activated charcoal filter will not be purged.

Notes:

- Hose connections are secured with either spring-type or clamp-type clips.
- Always replace clamp-type clips with spring-type clips.
- Assembly tool VAS 5024 or hose clip pliers V.A.G 1921 are recommended for fitting spring-type clips.

Observe safety precautions=> Page 141 .

Observe rules for cleanliness => Page 142 .

Protected by copyright. Copying for private or commercial purposes, in part or in whole, is not permitted unless authorised by Volkswagen AG. Volkswagen AG does not guarantee or accept any liability with respect to the correctness of information in this document. Copyright by Volkswagen AG.
satelettronica

3.3 - Servicing parts of the activated charcoal filter system

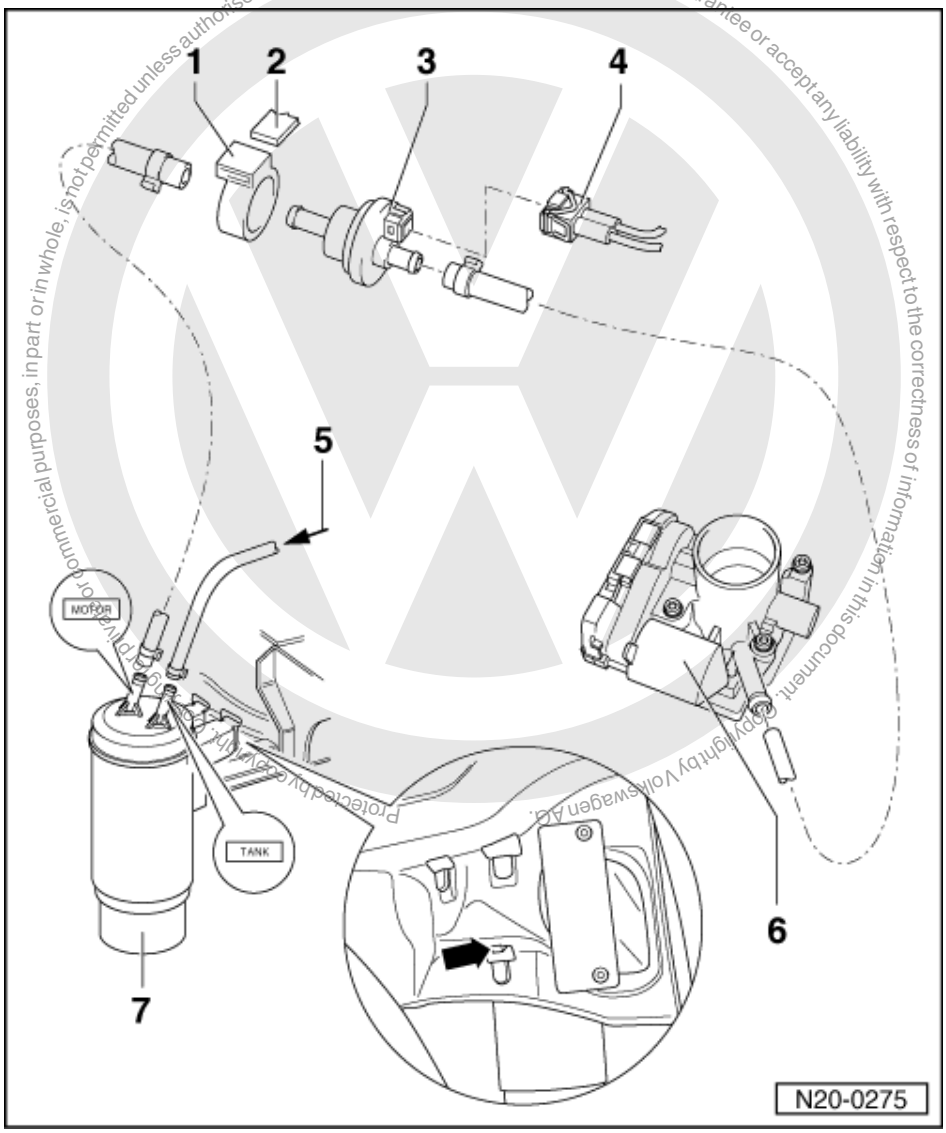

1 Retaining ring
2 Bracket
- On body front right

3 Solenoid valve1 (N80)
- Valve closed with ignition switched off
- When the engine is warm the valve will be activated from the engine control unit (pulsed)
- Checking activation:

=> Repair group 01; Final control diagnosis; Performing final control diagnosis Final control diagnosis Performing final control diagnosis

4 Connector
5 Breather pipe
- From gravity/overflow valve on fuel tank
  => Page 136 , item 4

satelettronica

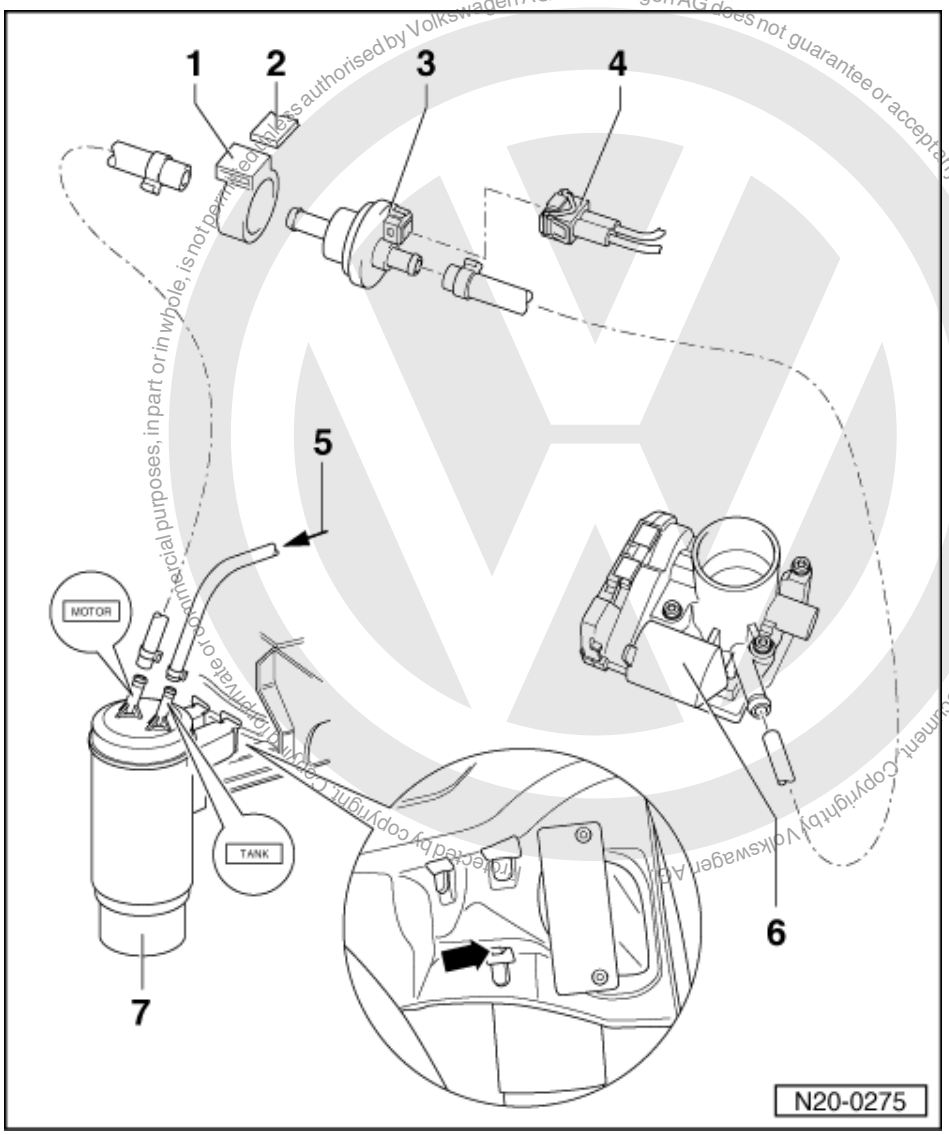

6 Throttle valve control part
7 Activated charcoal filter

- Location: in front right wheel housing
- Connection "MOTOR" to solenoid valve 1, item - 3 -
- Connection "TANK" with vacuum non-return valve
- To remove, release securing tab -arrow- and push container out upwards

satelettronica

3.4 - Checking fuel tank breather

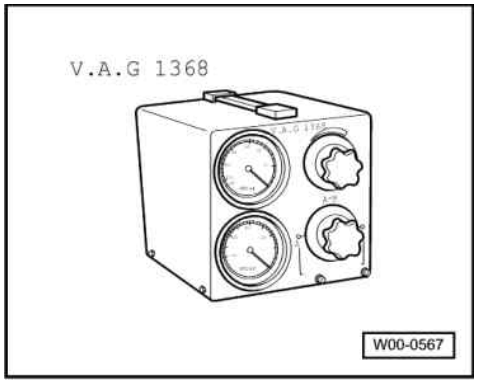

Special tools, workshop equipment, testers, measuring instruments and auxiliary items required

- -> V.A.G 1368 Vacuum tester

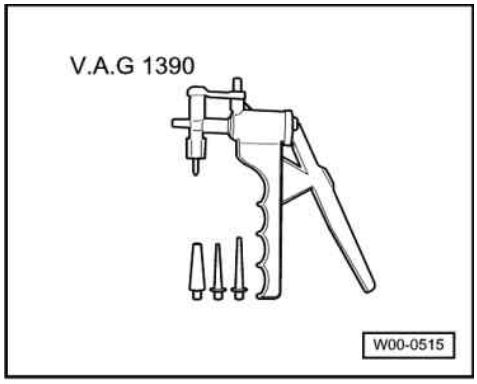

- -> V.A.G 1390 Hand vacuum pump

Test conditions

- Ignition must be switched off

Test sequence

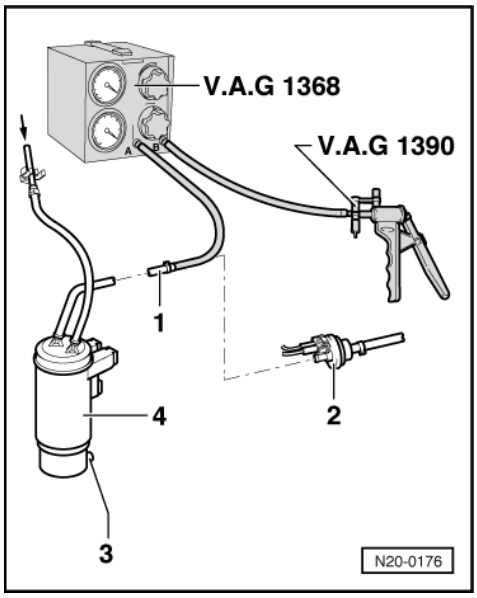

Protected by copyright. Copying for private or commercial purposes, in part or in whole, is not permitted unless authorised by Volkswagen AG. Volkswagen AG does not guarantee or accept any liability with respect to the correctness of information in this document. Copyright by Volkswagen AG.
satelettronica

- -> First pull vent hose -1- off activated charcoal filter at valve -2-.
- Connect hand vacuum pump V.A.G 1390 and vacuum tester V.A.G 1368 as shown to hose -1-.
- Set vacuum tester to -A/B- position.
- Operate hand vacuum pump V.A.G 1390 several times.
  Vacuum must not
  build up.

If vacuum builds up:

- Check breather connection -3- located on bottom of activated charcoal filter -4- for soiling, clean if necessary.

If vacuum does not build up:

- Temporarily seal breather connection -3- and operate vacuum pump again several times.
  A vacuum must build up.
  (Vacuum non-return valve in activated charcoal filter must close).

If vacuum does not build up:

- Renew activated charcoal filter.

Checking lines to fuel tank and fuel cap

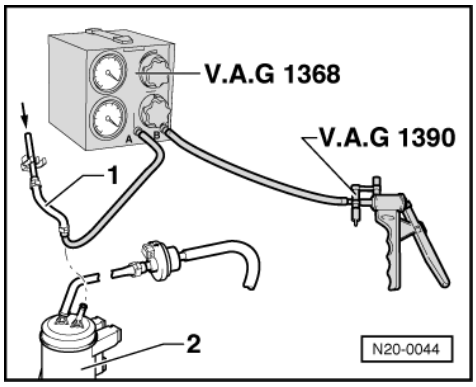

- -> Pull vent hose -1- from fuel tank off activated charcoal filter -2-.
- Connect hand vacuum pump V.A.G 1390 and vacuum tester V.A.G 1368 as shown to hose -1-.
- Set vacuum tester to -A/B- position.
- Remove fuel filler cap from filler neck.
- Operate V.A.G 1390 several times. Vacuum must
  not build-up.

If vacuum builds-up:

- Check gravity/overflow valve => Page 136 , item 5
- Check line -1- from fuel tank for blockage.

If vacuum does not build up:

- Refit fuel filler cap.
- Operate hand vacuum pump V.A.G 1390 several times.
  Vacuum must not
  build up.

Note:

If the fuel level in the tank is low the hand vacuum must be operated at least 20...30 times.

If vacuum builds up:

- Replace fuel tank cap.

Protected by copyright. Copying for private or commercial purposes, in part or in whole, is not permitted unless authorised by Volkswagen AG. Volkswagen AG does not guarantee or accept any liability with respect to the correctness of information in this document. Copyright by Volkswagen AG.
satelettronica

26 - Exhaust system

Protected by copyright. Copying for private or commercial purposes, in part or in whole, is not permitted unless authorised by Volkswagen AG. Volkswagen AG does not guarantee or accept any liability with respect to the correctness of information in this document. Copyright by Volkswagen AG.

1 - Removing and installing parts of exhaust system

1.1 - Removing and installing parts of exhaust system

Notes:

- After working on the exhaust system ensure that the system is not under stress, and that it has sufficient clearance from the bodywork. If necessary, loosen double and single clamps and align silencer and exhaust pipe so that sufficient clearance is maintained to the bodywork and the support rings are evenly loaded.
- If the catalyst is renewed, erase learnt values and adapt the engine control unit:

=> Repair group 24; Engine control unit; Erasing learnt values and adapting engine control unit to throttle valve control part Engine control unit Erasing learnt values and adapting engine control unit to throttle valve control part

- Renew self-locking nuts.
- Components marked with * will be checked by self-diagnosis:

=> Repair group 01; Fault memory; Interrogating and erasing fault memory Fault memory Interrogating and erasing fault memory

satelettronica

1.2 - Exhaust manifold, front exhaust pipe and catalyst with attachments

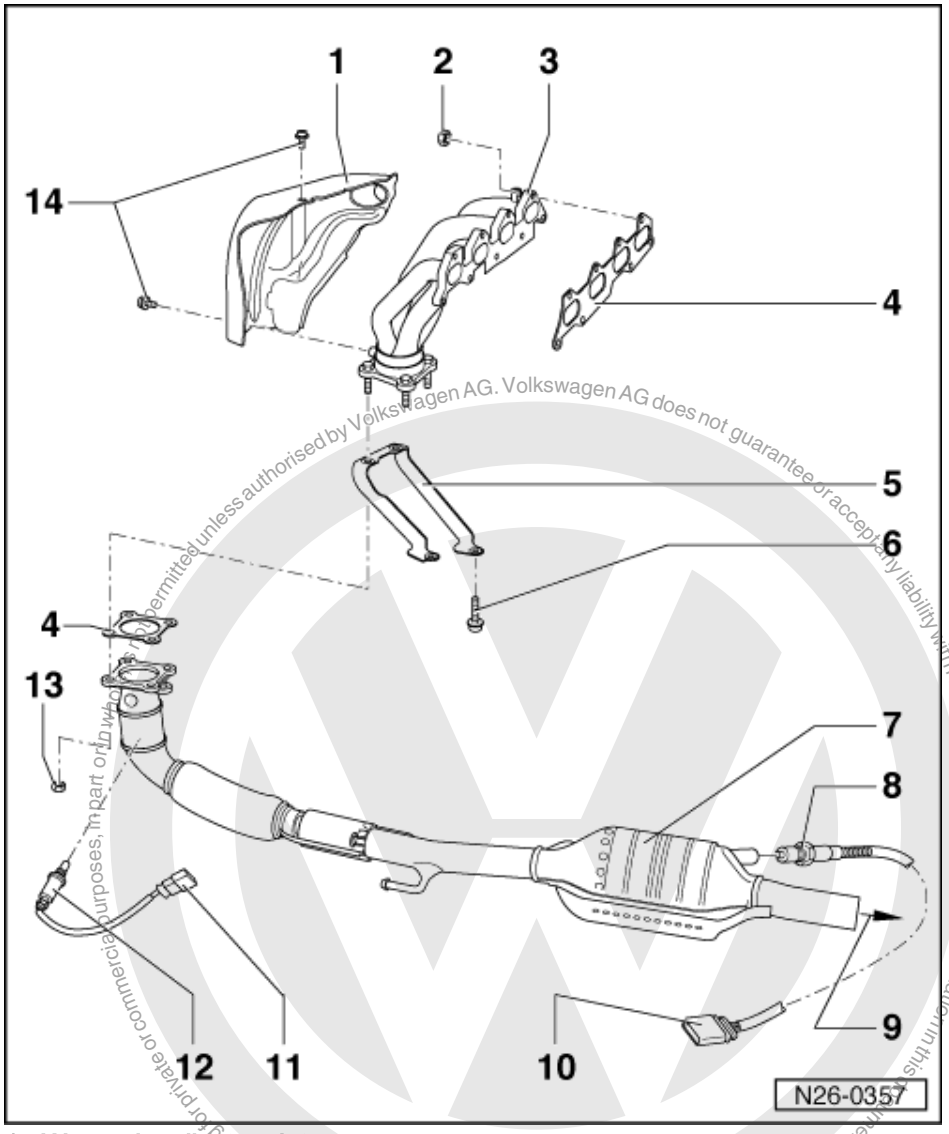

1 Warm air collector plate
2 Lock nut, 25 Nm
3 Exhaust manifold
4 Gasket
- Renew

5 Bracket
6 20 Nm
7 Front exhaust pipe with catalysts

Protected by copyright. Copying for private or commercial purposes, in part or in whole, is not permitted unless authorised by Volkswagen AG. Volkswagen AG does not guarantee or accept any liability with respect to the correctness of information in this document. Copyright by Volkswagen AG.
satelettronica

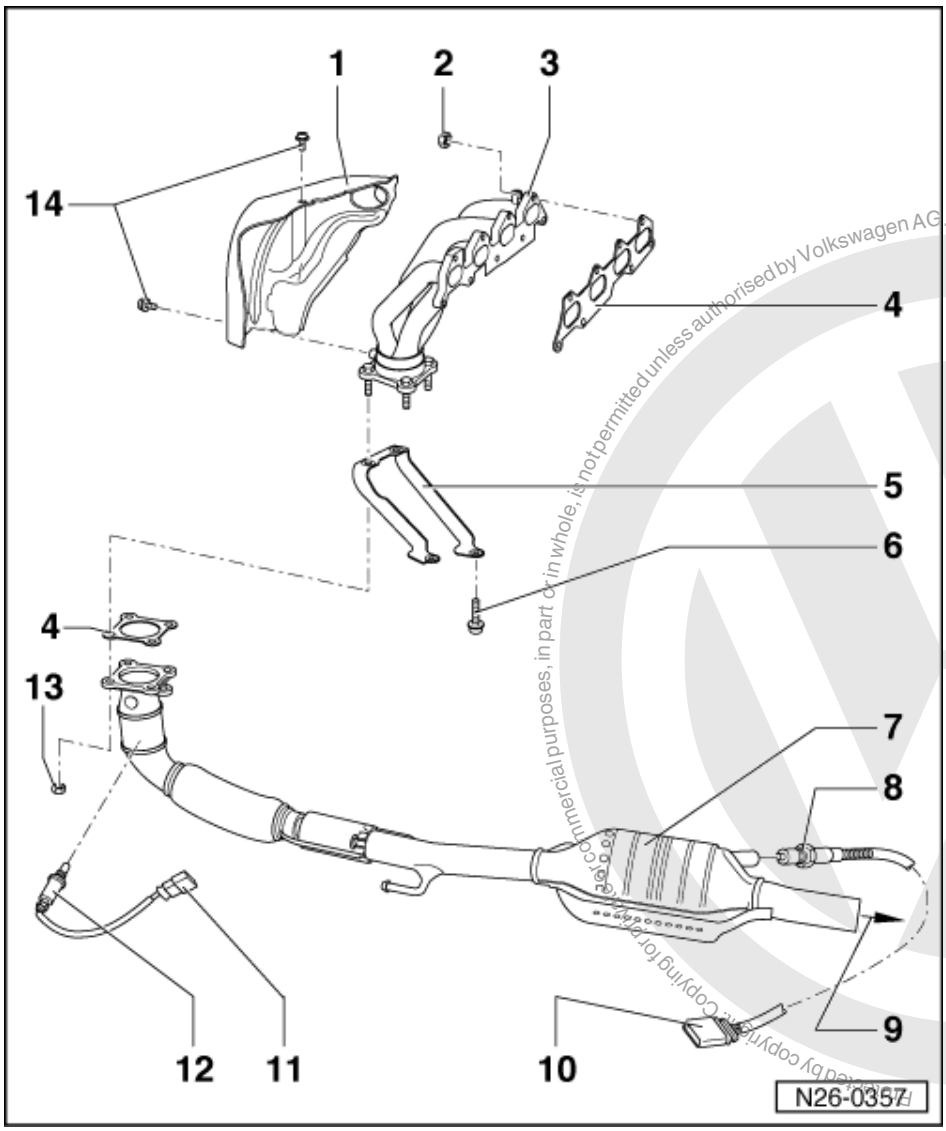

8 Lambda probe 2 after catalyst (G130)*, 50 Nm
- Checking:

=> Repair group 24; Check functions; Check Lambda probe and Lambda regulation after catalyst Check functions Check Lambda probe and Lambda regulation after catalyst

- Grease only the threads with "G 052 112 A3"; "G 052 112 A3" must not get into the slots on the probe body
- Remove and install with 3337

9 To silencer

10 Connector
- For Lambda probe 2 after catalyst (G130) and Lambda probe heating (Z29)
- Black, 4-pin

Reproduced by copyright. Copying for commercial purposes, in part or in whole, is not permitted unless authorised by Volkswagen AG. Volkswagen AG does not guarantee or accept any liability with respect to the correctness of information in this document. Copyright by Volkswagen AG.
satelettronica

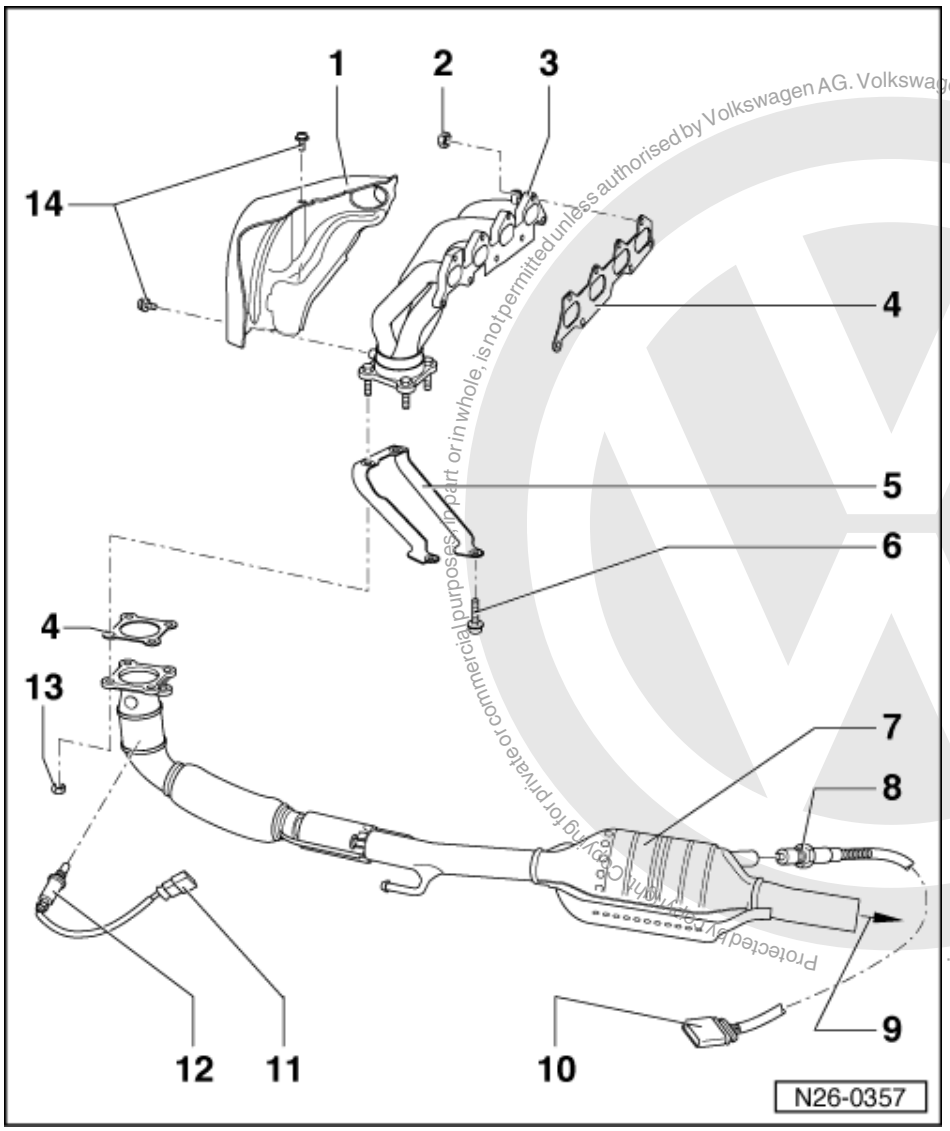

Protected by copyright. Copying for private or commercial purposes, in part or in whole, is not permitted unless authorised by Volkswagen AG. Volkswagen AG does not guarantee or accept any liability with respect to the correctness of information in this document. Copyright by Volkswagen AG.

satelettronica

11 Connector

- For Lambda probe 1 before catalyst (G39) and Lambda probe heating (Z19)
- Black, 6-pin

12 Lambda probe 1 before catalyst (G39)*, 50Nm

- Checking:

=> Repair group 24; Check functions; Check Lambda probe and Lambda regulation before catalyst Check functions Check Lambda probe and Lambda regulation before catalyst

- Grease only the threads with "G 052 112 A3"; "G 052 112 A3" must not get into the slots on the probe body
- Remove and install with 3337

13 Locating nut, 40 Nm

14 10 Nm

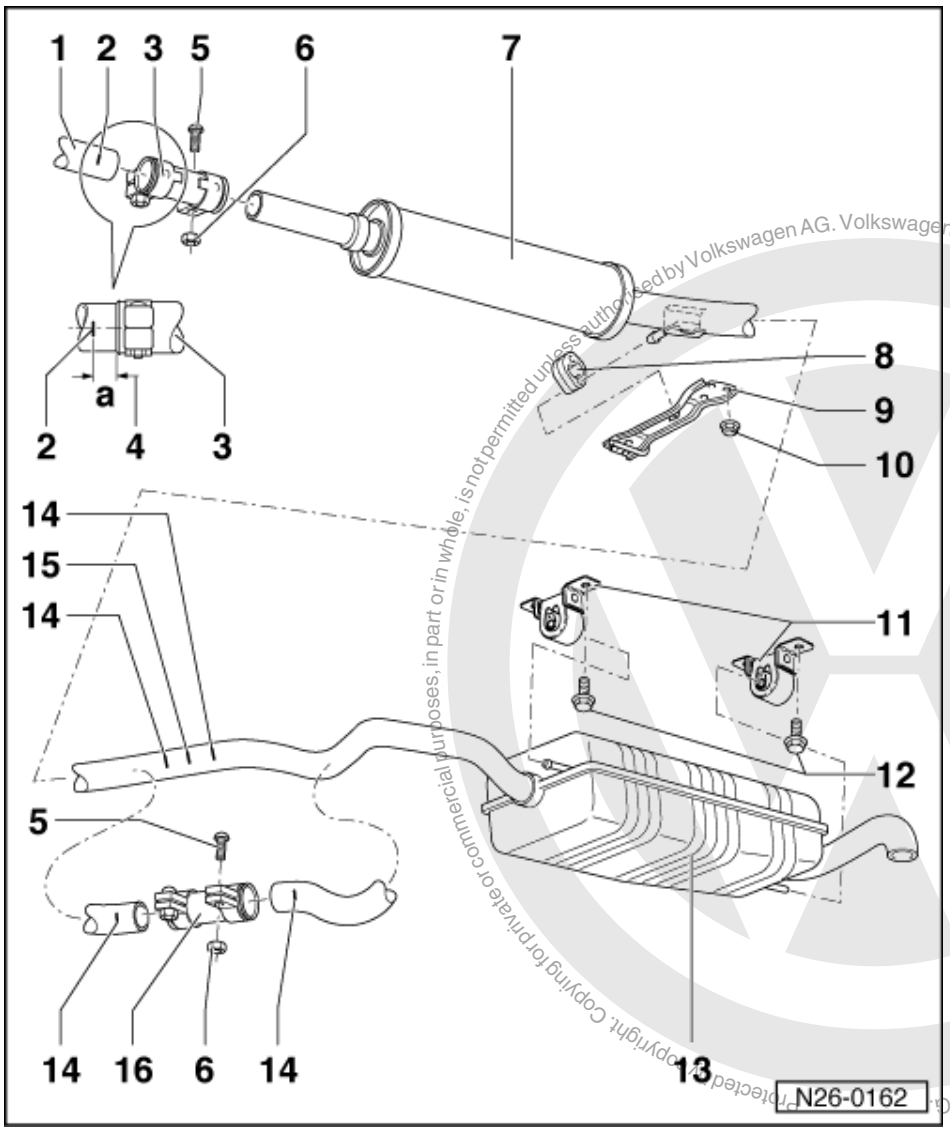

Copyright. Copying for private or commercial purposes, in part or in whole, is not permitted unless authorised by Volkswagen AG. Volkswagen AG does not guarantee or accept any liability with respect to the correctness of information in this document. Copyright by Volkswagen AG.

satelettronica

Silencer with mountings

1 Front exhaust pipe
2 Marking
- Three times on circumference

3 Double clamp
4 Dimension-a- = ca. 5 mm
5 Carriage bolt
6 M8: 25 Nm
M10: 40 Nm
7 Front silencer1)
8 Retaining ring
- Renew if damaged
- Note installation position
  => Fig. 1

9 Connecting piece
10 15 Nm
11 Mounting

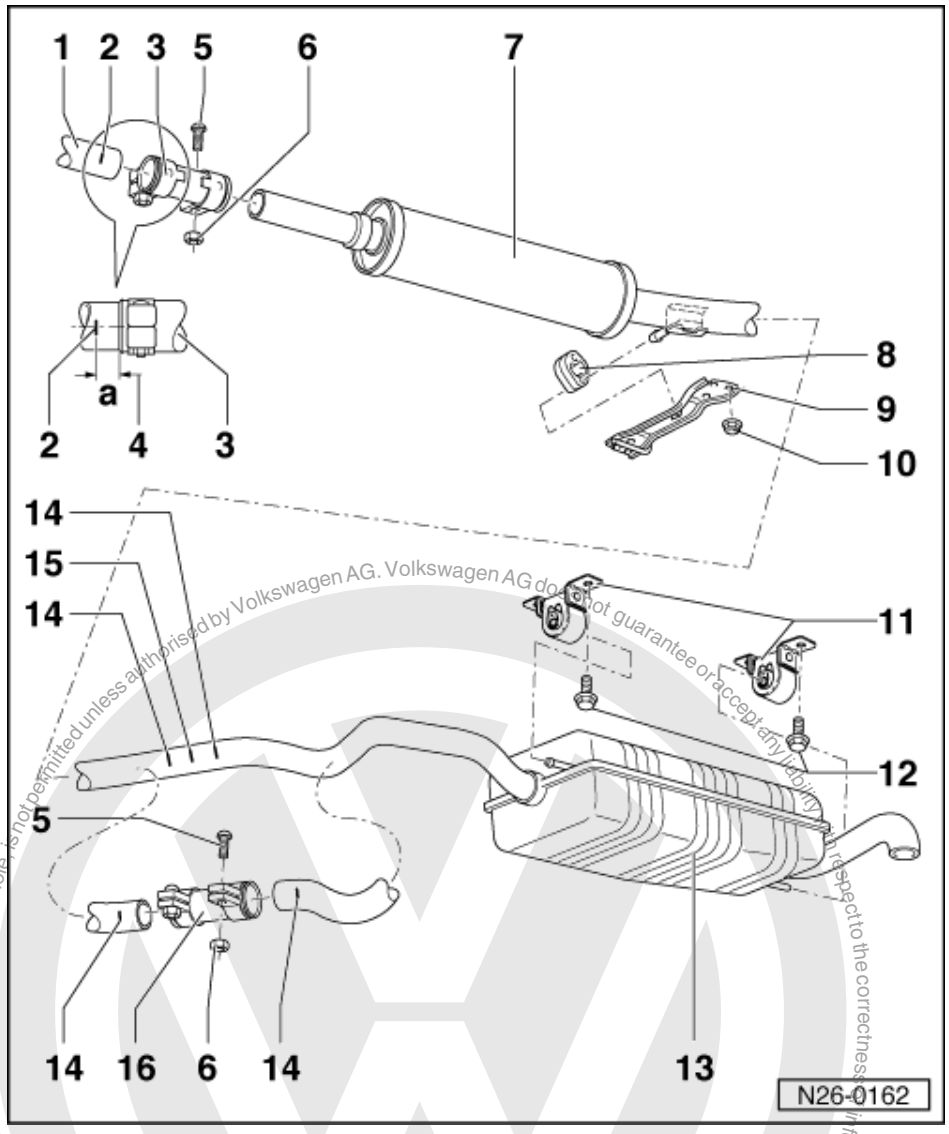

12 20 Nm + 1/4 turn (90 °) further

13 Rear silencer1)

14 Marking

- Visible from below
- Double clamp - 16 - for repairs

15 Separating point

- For repair cases1)
- Marked by indentation on connecting pipe

16 Repair double clamp

- Must be slid onto the markings - 14 -

satelettronica

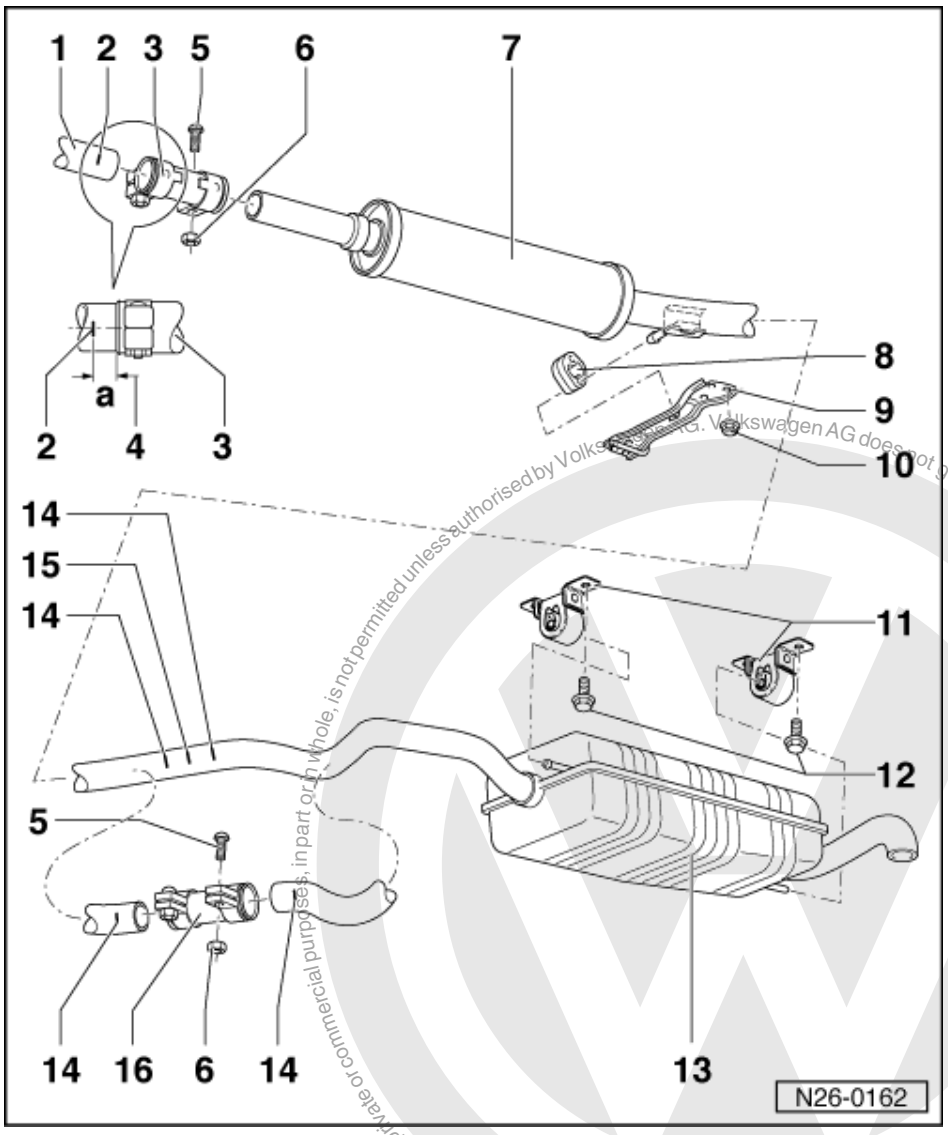

1) Front and rear silencers are installed as a single component as standard. In repair cases the front and rear silencers are supplied individually and a repair double clamp item 16 is supplied as a joint. Cut through connecting pipe at separating point - 15 - with a body saw e.g. V.A.G 1523.

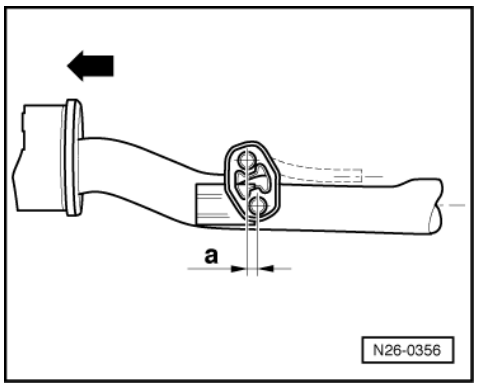

-> Fig. 1 Alignment of exhaust system

- Engine must be cold.

Protected by copyright. Copying for private or commercial purposes, in part or in whole, is not permitted unless authorised by Volkswagen AG. Volkswagen AG does not guarantee or accept any liability with respect to the correctness of information in this document. Copyright by Volkswagen AG.
satelettronica

- Align exhaust system on retaining ring -item 8 - to achieve dimension -a-.
  Arrow points in direction of travel
  Dimension -a- = 10 ±2 mm

1.3 - Checking catalyst

Engine code: AVY

Special tools, workshop equipment, testers, measuring instruments and auxiliary items required

- Fault reader V.A.G 1551 or vehicle system tester V.A.G 1552 with cable V.A.G 1551/3A

Check conditions

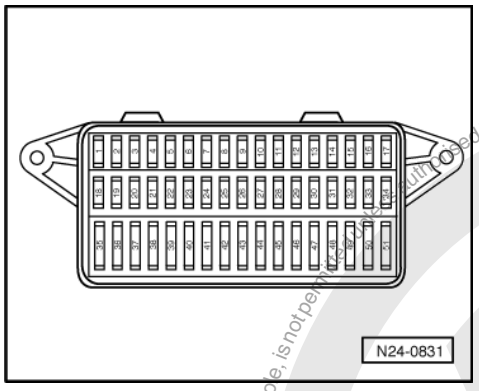

- -> All fuses must be OK.
- Exhaust system between catalyst and cylinder head must be free of leaks
- Coolant temperature must be at least 80 °C, =>display group 04, display zone 3.
- Vehicle stationary
- All electrical consumers, e.g. lights and rear window heating must be switched off.
- If the vehicle is equipped with an air conditioning system, this must be switched off.

Test sequence

- Connect fault reader V.A.G 1551 (V.A.G 1552). Start engine and select engine control unit with "Address word" 01. Connecting fault reader and selecting engine control unit:

=> Repair group 01; Self-diagnosis general: Connecting fault reader V.A.G 1551 and selecting engine electronics control unit. Self-diagnosis general: Connecting fault reader V.A.G 1551 and selecting engine electronics control unit.

- Interrogate fault memory. Repair faults as necessary and then erase fault memory.

=> Repair group 01; Fault memory; Interrogating and erasing fault memory of engine control unit Fault memory Interrogating and erasing fault memory of engine control unit

-> Indicated on display:

```
Rapid data transfer      HELP
Select function XX
```

- Press keys 0, 3 and 4 for "Display group number 34" and confirm entry with Q key.

-> Indicated on display:
(1...4 = Display zones)

```
System in basic setting      34
     1     2     3     4
```

- Depress brake pedal and hold it down.

Protected by copyright. Copying for private or commercial purposes, in part or whole, is not permitted unless authorised by Volkswagen AG. Volkswagen AG does not guarantee or accept any liability with respect to the correctness of information in this document. Copyright by Volkswagen AG.
satelettronica

The engine speed is increased by the engine control unit to approx. 1100...1400 rpm.

- Allow engine to run at increased engine speed until display zone 4 jumps from "Test OFF" to "Test ON". The catalyst temperature in display zone 2 must be a minimum of 400 °C.

Note:

This process can take a few minutes.

- Allow engine to continue to run at increased engine speed until display zone 4 displays the specification "B1-P1 OK.".

If the display does not indicate as described:

- Interrogate fault memory:

=> Repair group 01; Fault memory; Interrogating and erasing fault memory of engine control unit Fault memory Interrogating and erasing fault memory of engine control unit

If the display indicates as described:

- Press C key.

The engine speed decreases to idling speed.

-> Indicated on display:

```
Introduce basic setting     HELP
Input display group number XXX
```

- Press keys 0, 4 and 6 for "Display group number 46" and confirm entry with Q key.

-> Indicated on display:
(1...4 = Display zones)

```
Basic setting 46
     1     2     3     4
```

- Depress brake pedal and hold it down.

The engine speed is increased by the engine control unit to approx. 1100...1400 rpm.

- Maintain the engine speed until the display in display zone 4 jumps from "Test OFF" to "Test ON". The catalyst temperature in display zone 2 must be min. 400 °C.

Note:

This process can take a few minutes.

- Continue to maintain the speed until the specification "Cat B1 OK" appears in display zone 4.

If "Cat. B1 not OK" appears in display zone 4:

- Interrogate fault memory:

=> Repair group 01; Fault memory; Interrogating and erasing fault memory of engine control unit Fault memory Interrogating and erasing fault memory of engine control unit

If the specification "Cat B1 OK" is obtained:

Protected by copyright. Copyright by Volkswagen AG. Volkswagen AG does not guarantee or accept any liability with respect to the correctness of information in this document. Copyright by Volkswagen AG. Copying for private or commercial purposes, in part or in whole, is not permitted unless authorised by Volkswagen AG.
satelettronica

- Press ⇒key.

-> Indicated on display:

```
Rapid data transfer      HELP
Select function XX
```

- Press keys 0 and 6 for the "End data transfer" function and confirm input with the Q key.

Protected by copyright. Copying for private or commercial purposes, in part or in whole, is not permitted unless authorised by Volkswagen AG. Volkswagen AG does not guarantee or accept any liability with respect to the correctness of information in this document. Copyright by Volkswagen AG.

satelettronica